KLAUS Multiparking GmbH
Hermann-Krum-Straße 2
D-88319 Aitrach
Fon +49 (0) 7565 508-0
Fax +49 (0) 7565 508-88
info@multiparking.com
www.multiparking.com

PRODUCT DATA

multibase 2072i

Outdoor installation

Page 1 Section Car data
Page 2 Height dimensions
Page 3 Function Width dimensions
Page 4 Approach Load per parking space
Page 5 Load plan
Page 6 Electrical installation
Page 7 Technical data
Page 8 To be performed by the customer Description

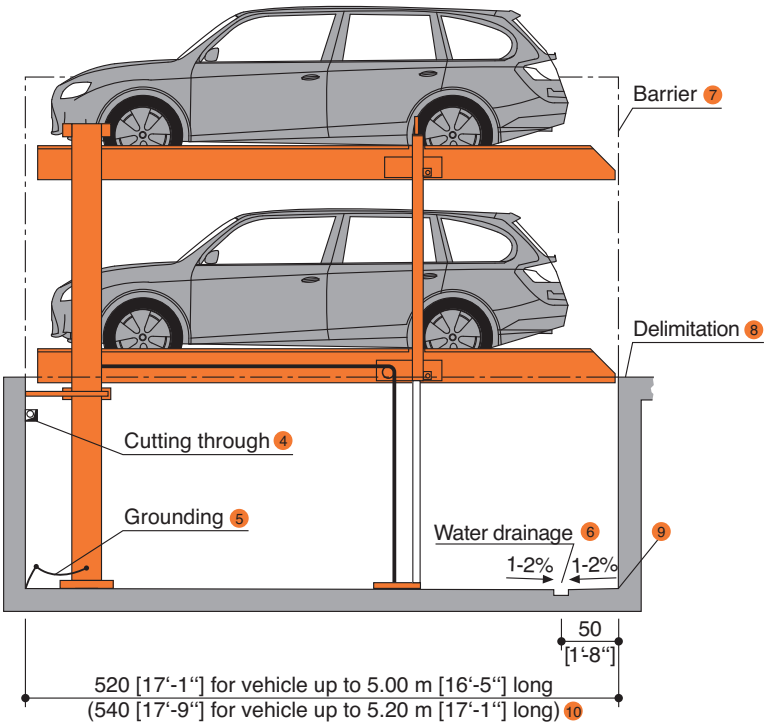

Dimensions

All space requirements are minimum finished dimensions.

Tolerances for space requirements $^{+3}_{0}$ [$^{+1''}_{0}$] 2

EB (single platform) = 2 vehicles
DB (double platform) = 4 vehicles

Dimensions:	cm [ft]	(1 cm = 0,393 in)
Weights:	kg [lbs]	(1 kg = 2.2 lbs)
Forces:	kN [lbf]	(1 kN = 224.8 lbf)
Temperature:	°C [°F]	(0° C = 32° F)

Suitable for

Standard passenger cars:
Limousine, Station Wagon, SUV, Van according to clearance and maximum surface load.

	Standard	Special 1
width	190 cm [6'-3"] 3	190 cm [6'-3"] 3
weight	see page 4	
wheel load	see page 4	

Clearance profile

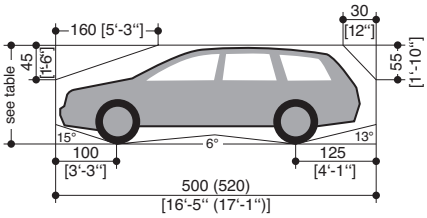

Height dimensions

See page 2 for all pit dimensions.

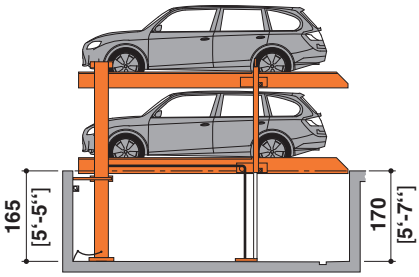

Smallest type

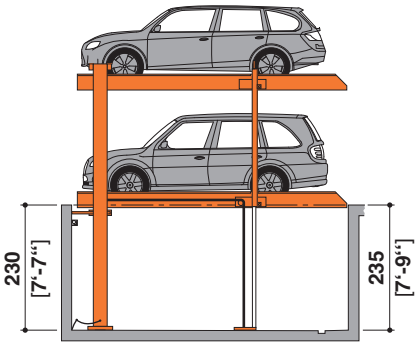

Biggest type

1. Special system: maximum load for extra charge.
2. To follow the minimum finished dimensions, make sure to consider the tolerances according to VOB, part C (DIN 18330 and 18331) and the DIN 18202.
3. Car width for platform width 230 cm [7'-7"]. If wider platforms are used it is also possible to park wider cars.
4. For dividing walls: cutting through 10 x 10 cm [4" x 4"].
5. Potential equalization from foundation grounding connection to system (provided by the customer).
6. Slope with drainage channel and sump. With direct connection to the sewerage system.
7. Three-sided barrier compliant to DIN EN ISO 13857.
8. In compliance with DIN EN 14010, 10 cm [4"] wide yellow-black markings compliant to ISO 3864 must be applied by the customer to the edge of the pit in the entry area to mark the danger zone (see „load plan" page 5).
9. At the transition section between pit floor and walls no hollow mouldings/coves are possible. If hollow mouldings/coves are required, the systems must be designed smaller or the pits accordingly wider.
10. For convenient use of your parking space and due to the fact that the cars keep becoming longer we recommend a pit length of 540 cm [17'-9"].

MultiBase 2072i Outdoor installation I Code number 587.31.310-002 I Version 07.2018

Page 1 Section Car data
Page 2 Height dimensions
Page 3 Function Width dimensions
Page 4 Approach Load per parking space
Page 5 Load plan
Page 6 Electrical installation
Page 7 Technical data
Page 8 To be performed by the customer Description

Height dimensions

2072i-165

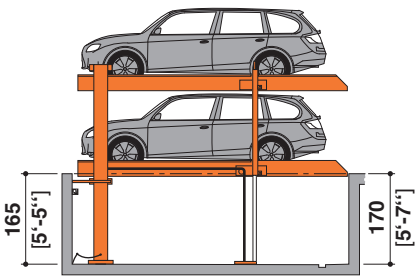

Car height lower level
150 [4‘-11“]

2072i-170

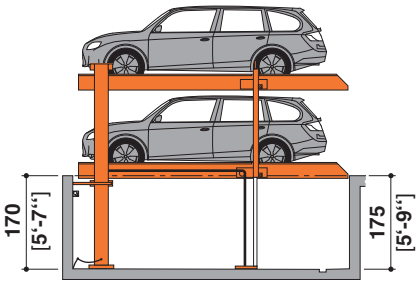

Car height lower level
155 [5‘-1“]

2072i-175

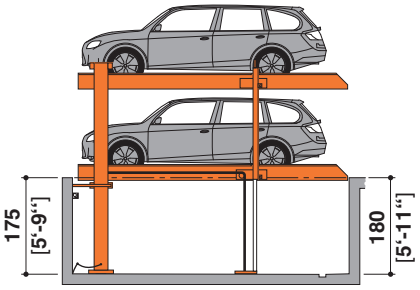

Car height lower level
160 [5‘-3“]

2072i-180 12

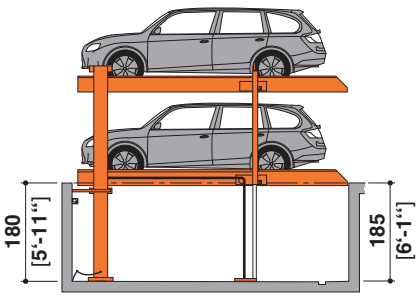

Car height lower level
165 [5‘-5“]

2072i-185

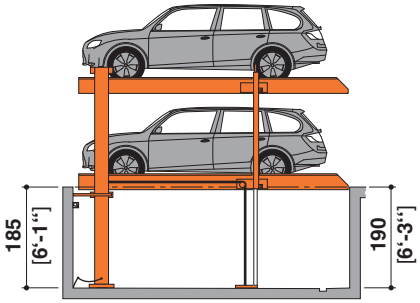

Car height lower level
170 [5‘-7“]

2072i-190

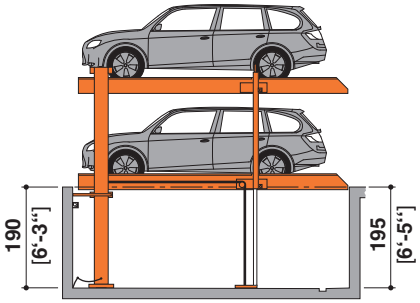

Car height lower level
175 [5‘-9“]

2072i-195

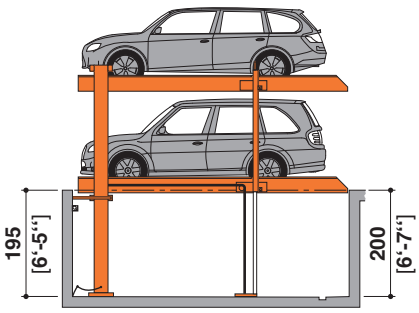

Car height lower level
180 [5‘-11“]

2072i-205

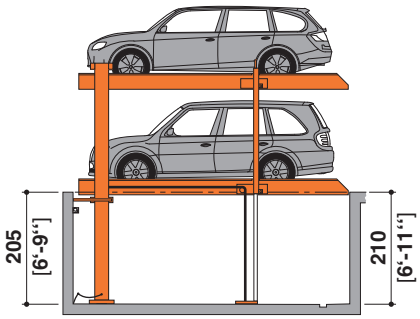

Car height lower level
190 [6‘-3“]

2072i-215

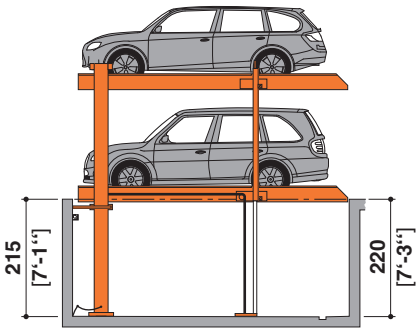

Car height lower level
200 [6‘-7“]

2072i-220

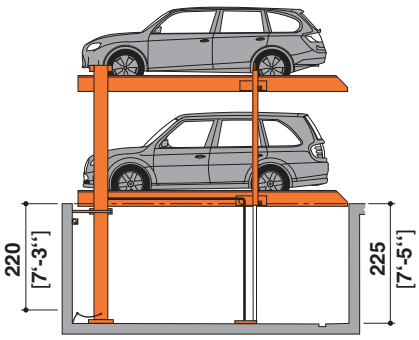

Car height lower level
205 [6‘-9“]

2072i-230

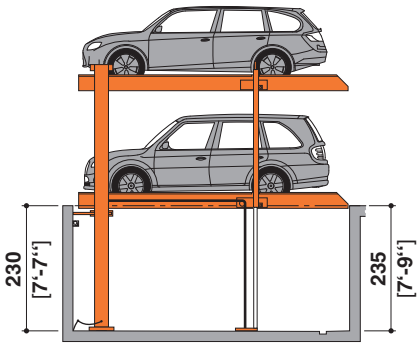

Car height lower level
215 [7‘-1“]

To the extent that the conditions of the construction do not restrict the height, the car height on the upper parking slots is not restricted.

11 Standard type

Page 1
Section
Car data

Page 2
Height dimensions

Page 3
Function
Width dimensions

Page 4
Approach
Load per parking space

Page 5
Load plan

Page 6
Electrical installation

Page 7
Technical data

Page 8
To be performed by the customer
Description

Function

System lifted

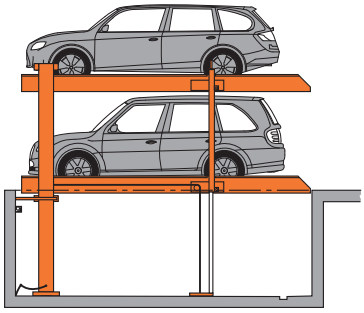

System lowered

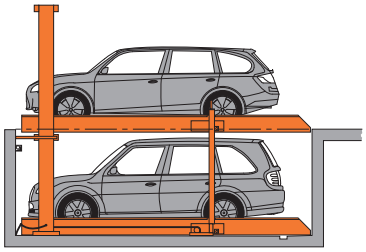

Width dimensions

Single Platform (EB)

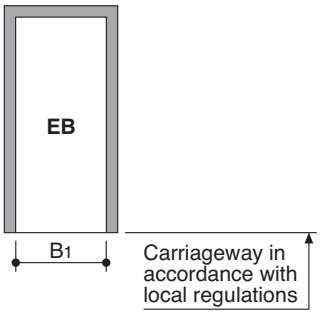

Usable platform width	B1
230 [7'-7"]	260 [8'-6"]
240 [7'-10"]	270 [8'-10"]
250 [8'-2"]	**280 [9'-2"]**
260 [8'-6"]	**290 [9'-6"]**
270 [8'-10"]	**300 [9'-10"]**

Double Platform (DB)

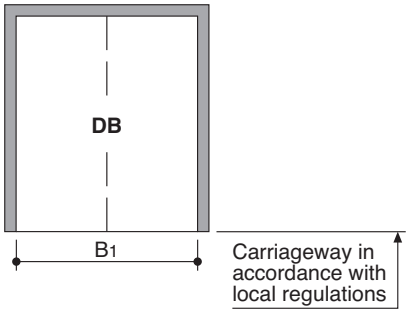

Usable platform width	B1
460 [15'-1"]	490 [16'-1"]
470 [15'-5"]	500 [16'-5"]
480 [15'-9"]	510 [16'-9"]
490 [16'-1"]	520 [17'-1"]
500 [16'-5"]	**530 [17'-5"]**
510 [16'-9"]	**540 [17'-9"]**
520 [17'-1"]	**550 [18'-1"]**
530 [17'-5"]	**560 [18'-4"]**
540 [17'-9"]	**570 [18'-8"]**

Single and Double Platform (EB + DB) – Example

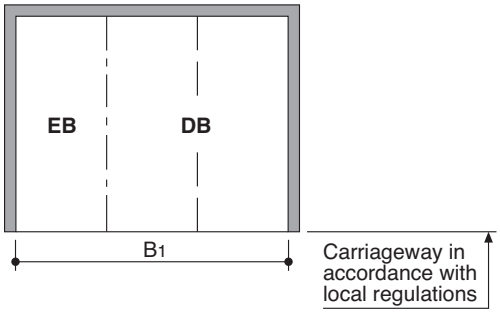

Usable platform width	B1
230 + 460 [7'-7" + 15'-1"]	750 [24'-7"]
240 + 470 [7'-10" + 15'-5"]	770 [25'-3"]
250 + 480 [8'-2" + 15'-9"]	790 [25'-11"]
250 + 500 [8'-2" + 16'-5"]	**810 [26'-7"]**
270 + 500 [8'-10"+ 16'-5"]	**830 [27'-3"]**
270 + 510 [8'-10"+ 16'-9"]	**840 [27'-7"]**
270 + 520 [8'-10"+ 17'-1"]	**850 [27'-11"]**
270 + 530 [8'-10"+ 17'-5"]	**860 [28'-3"]**
270 + 540 [8'-10"+ 17'-9"]	**870 [28'-7"]**

For parking boxes on the edges and boxes with intermediate walls we recommend our maximum platform width of 270 cm [8'-10"] for single platforms and 540 cm [17'-9"] for double platforms. Problems may occur if smaller platform widths are used (depending on car type, access and individual driving behaviour and capability).

For larger limousines and SUV wider driveways are necessary (in particular on the boxes on the sides due to the missing manoeuvring radius).

Page 1 Section Car data
Page 2 Height dimensions
Page 3 Function Width dimensions
Page 4 Approach Load per parking space
Page 5 Load plan
Page 6 Electrical installation
Page 7 Technical data
Page 8 To be performed by the customer Description

Approach

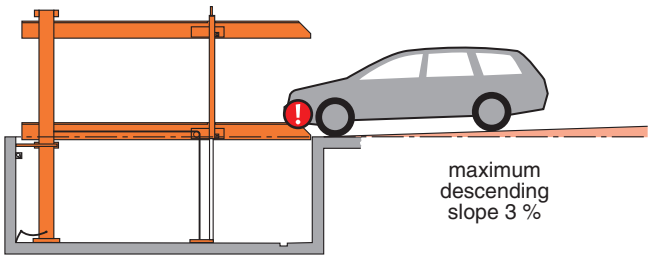

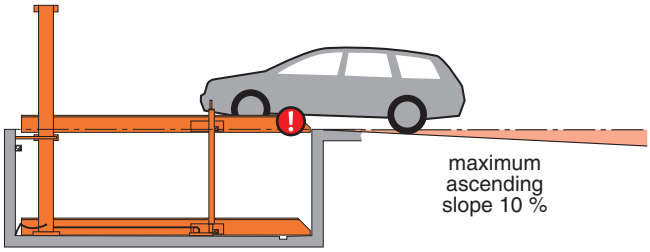

The illustrated maximum approach angles must not be exceeded. Incorrect approach angles will cause serious maneouvring & positioning problems on the parking system for which the local agency of KLAUS Multiparking accepts no responsibility.

Load per parking space

For countries where snow loads are a crucial factor (weights in kg)

MultiBase 2072i 2,0 to. (EB + DB)

parking spaces	weight	wheel load
upper parking space	1500 kg	375 kg
lower parking space	2000 kg	500 kg

MultiBase 2072i 2,6 to. (EB + DB) – for extra charge

parking spaces	weight	wheel load
upper parking space	2000 kg	500 kg
lower parking space	2600 kg	650 kg

MultiBase 2072i 3,0 to. (only EB) – for extra charge

parking spaces	weight	wheel load
upper parking space	2500 kg	625 kg
lower parking space	3000 kg	750 kg

For countries where snow loads is *no* relevant factor (weights in kg)

MultiBase 2072i 2,0 to. (EB + DB)

parking spaces	weight	wheel load
upper parking space	2000 kg	500 kg
lower parking space	2000 kg	500 kg

MultiBase 2072i 2,6 to. (EB + DB) – for extra charge

parking spaces	weight	wheel load
upper parking space	2600 kg	650 kg
lower parking space	2600 kg	650 kg

MultiBase 2072i 3,0 to. (only EB) – for extra charge

parking spaces	weight	wheel load
upper parking space	3000 kg	750 kg
lower parking space	3000 kg	750 kg

For countries where snow loads are a crucial factor (weights in lbs)

MultiBase 2072i 4400 lbs (EB + DB)

parking spaces	weight	wheel load
upper parking space	3300 lbs	830 lbs
lower parking space	4400 lbs	1100 lbs

MultiBase 2072i 5730 lbs (EB + DB) – for extra charge

parking spaces	weight	wheel load
upper parking space	4400 lbs	1100 lbs
lower parking space	5730 lbs	1400 lbs

MultiBase 2072i 6610 lbs (only EB) – for extra charge

parking spaces	weight	wheel load
upper parking space	5500 lbs	1300 lbs
lower parking space	6610 lbs	1650 lbs

For countries where snow loads is *no* relevant factor (weights in lbs)

MultiBase 2072i 4400 lbs (EB + DB)

parking spaces	weight	wheel load
upper parking space	4400 lbs	1100 lbs
lower parking space	4400 lbs	1100 lbs

MultiBase 2072i 5730 lbs (EB + DB) – for extra charge

parking spaces	weight	wheel load
upper parking space	5730 lbs	1400 lbs
lower parking space	5730 lbs	1400 lbs

MultiBase 2072i 6610 lbs (only EB) – for extra charge

parking spaces	weight	wheel load
upper parking space	6610 lbs	1650 lbs
lower parking space	6610 lbs	1650 lbs

Applies to a snow depth of 20 cm [8”]; in case of larger snow depths the snow must be removed.

Page 1 Section Car data
Page 2 Height dimensions
Page 3 Function Width dimensions
Page 4 Approach Load per parking space
Page 5 Load plan
Page 6 Electrical installation
Page 7 Technical data
Page 8 To be performed by the customer Description

Load plan

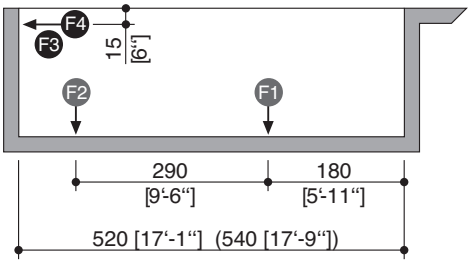

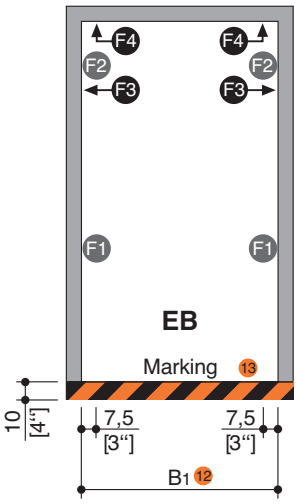

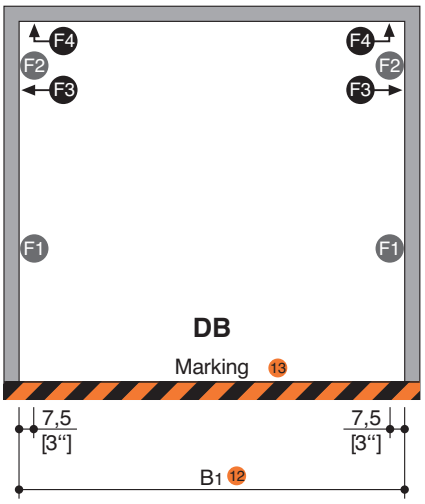

Platform load in kg

Platform load	F1	F2	F3	F4 14
EB 2000 kg	+28 −1,7	+12	±1	±1,6
EB 2600 kg	+36 −2,2	+15	±1,4	±2,1
EB 3000 kg	+42 −2,4	+17	±1,6	±2,4
DB 2000 kg	+51 −6,7	+20	±1,7	±3
DB 2600 kg	+67 −8,6	+26	±2,2	±3,8

Platform load in lbs

Platform load	F1	F2	F3	F4 15
EB 4400 lbs	+6,295 −382	+2,698	±225	±360
EB 5730 lbs	+8,093 −495	+3,372	±315	±472
EB 6610 lbs	+9,442 −540	+3,822	±360	±540
DB 4400 lbs	+11,465 −1,506	+4,496	±382	±674
DB 5730 lbs	+15,062 −1,933	+5,845	±495	±854

Units are dowelled to the floor. Drilling depth: approx. 15 cm [6”].

Floor and walls below the drive-in level are to be made of concrete (quality minimum C20/25)!

The dimensions for the points of support are rounded values. If the exact position is required, please contact KLAUS Multiparking.

12 Dimension B1 see page 3

13 Marking compliant to ISO 3864 (colors used in this illustration are not ISO 3864 compliant)

14 All forces in kN

15 All forces in lbf

Page 1 Section Car data
Page 2 Height dimensions
Page 3 Function Width dimensions
Page 4 Approach Load per parking space
Page 5 Load plan
Page 6 Electrical installation
Page 7 Technical data
Page 8 To be performed by the customer Description

Electrical installation

Installation diagram

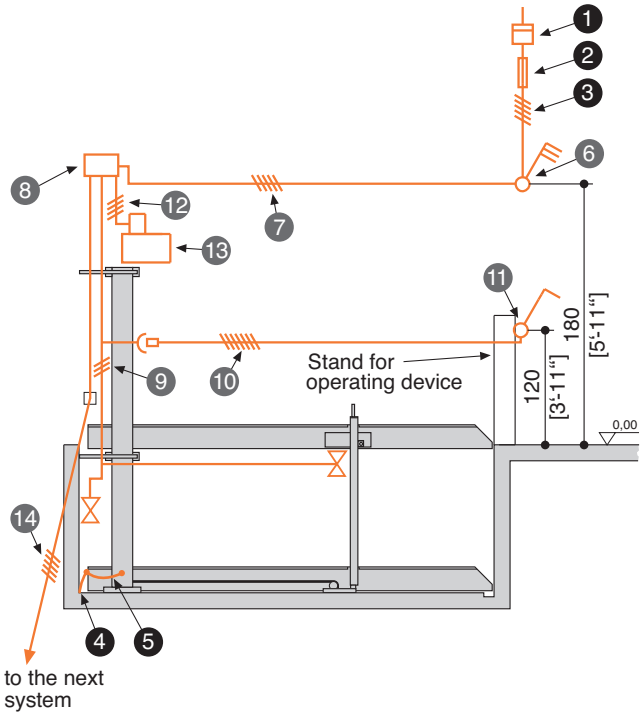

Electrical data (to be performed by the customer)

No.	Qunatity	Description	Position	Frequency
1	1	Electricity meter	in the supply line	
2	1	Main fuse:		
		3 x fuse 16 A (slow) or circuit breaker 3 x 16 A (trigger characteristic K or C)	in the supply line	1 per 3,0 kW unit
		3 x fuse 20 A (slow) or circuit breaker 3 x 20 A (trigger characteristic K or C)	in the supply line	1 per 5,2 kW unit
		2 x fuse 32 A (slow) or circuit breaker 2 x 32 A (trigger characteristic K or C)	in the supply line	1 per 3,7 kW unit
		3 x fuse 25 A (slow) or circuit breaker 3 x 25 A (trigger characteristic K or C)	in the supply line	1 per 4,0 kW unit
3	1	Supply line 5 x 2,5 mm² (3 PH + N + PE) with marked wire and protective conductor	to main switch	1 per 3,0 kW or 5,2 kW unit
		Supply line 5 x AWG 10 (2 PH + PE) with marked wire and protective conductor	to main switch	1 per 3,7 kW unit
		Supply line 5 x AWG 12 (3 PH + PE) with marked wire and protective conductor	to main switch	1 per 4,0 kW unit
4	every 10 m	Foundation earth connector	corner pit floor	
5	1	Equipotential bonding in accordance with DIN EN 60204 from foundation earth connector to the system		1 per system

Electrical data (included in delivery of KLAUS Multiparking)

No.	Description
6	Lockable main switch
7	Supply line 5 x 2,5 mm² (3 PH + N + PE) with marked wire and protective conductor (for 3,0 kW and 5,2 kW unit)
	Supply line 5 x AWG 10 (2 PH + PE) with marked wire and protective conductor (for 3,7 kW unit)
	Supply line 5 x AWG 12 (3 PH + PE) with marked wire and protective conductor (for 4,0 kW unit)
8	Junction box unit
9	Wiring harness multiparking system
10	Connection cable (operating device)
11	Operating device
12	Control line 4 x 2,5 mm² [4 x AWG 14] with marked wire and protective conductor
13	Hydraulic unit 3,0 kW/5,2 kW, three-phase current, 230/400 V / 50 Hz [16]
	Hydraulic unit 3,7 kW, two-phase current, 240 V / 60 Hz
	Hydraulic unit 4,0 kW, three-phase current, 120/208 V / 60 Hz
14	Connection cable to the next system

[16] Unit with 5,2 kW only for 2072i DB 2600 kg [5730 lbs]

Page 1 Section Car data
Page 2 Height dimensions
Page 3 Function Width dimensions
Page 4 Approach Load per parking space
Page 5 Load plan
Page 6 Electrical installation
Page 7 Technical data
Page 8 To be performed by the customer Description

Technical data

Field of application

By default, the system can only be used for a fixed number of users.
If different users use the system – only on the upper parking spaces – (e.g. short-time parkers in office buildings or hotels) the Multiparking system needs to be adjusted. If required, would you please contact us.

Units

Low-noise power units mounted to rubber-bonded-to metal mountings are installed. Nevertheless we recommend that parking system's garage be built separately from the dwelling. If it is not possible to install the hydraulic power units with the solenoid valves in adjacent buildings or spaces, the power unit and the solenoid valves must be housed in a cabinet (at an extra charge).

Building application documents

According to LBO and GaVo (garage regulations) the Multiparking systems are subject to approval. We will provide the required building application documents.

Gap covers

Any existing gaps between the systems or the platforms and the walls of the pit must be reduced to approx. 10 cm by installing sheet-metal covers (at an extra charge).

Environmental conditions

Environmental conditions for the area of multiparking systems:
Temperature range –20 to +40° C [–4 to +104° F].
Relative humidity 50% at a maximum outside temperature of +40° C [+104° F].
If lifting or lowering times are specified, they refer to an environmental temperature of +10° C [+50° F] and with the system set up directly next to the hydraulic unit. At lower temperatures or with longer hydraulic lines, these times increase.

Sound insulation

As per DIN 4109-1 (sound insulation in building construction), Section 9, KLAUS Multiparker are in the range of technical domestic installations (garage systems).

Normal sound insulation:

DIN 4109-1, Section 9, maximum permissible A-rated sound levels in rooms requiring external protection, generated by technical domestic installations and commercial businesses affiliated with the building.

Table 9 shows the values for the maximum permissible A-rated sound levels in rooms requiring external protection, generated by technical domestic installations and business affiliated with the building. As per line 2, the maximum sound level in living rooms and bedrooms must not exceed 30 dB (A). *User noises are not subject to the requirements (DIN 4109-1, Section 9).*

The following measures are required to comply with this value:
– Sound protection package according to offer/order (KLAUS Multiparking GmbH)
– Minimum sound insulation of the building of min. R'_W = 57 dB (service/item to be provided by the customer)

Increased sound insulation (special agreement):

VDI 4100 (sound insulation in building construction) Assessment and proposals for enhanced sound insulation.

Agreement: Maximum sound level in living rooms and bedrooms 25 dB (A). *User noises are not subject to the requirements (see VDI 4100, Paragraph 1, Scope of application – Notes).*

The following measures are required to comply with this value:
– Sound protection package according to offer/order (KLAUS Multiparking GmbH)
– Minimum sound insulation of the building of min. R'_W = 62 dB (service/item to be provided by the customer)

Note: User noises are basically noises that can be individually influenced by the user of our Multiparking systems. These include, for example, driving on the platform, slamming vehicle doors, engine and brake noises.

Operating device

The home and off position of the system must always be in the lowered position. Special controls with key interlock are required that ensure that the key can only be removed when the system has been lowered to its lowest position. Depending on the conditions of the construction project, a stand may be necessary for the control elements (at an extra charge).

Available documents

– wall recess plans
– maintenance offer/contract
– declaration of conformity
– test sheet on airborne and slid-borne sound

Care

To avoid damages resulting from corrosion, make sure to follow our cleaning and care instructions and to provide good ventilation of your garage.

Corrosion protection

See separate sheet regarding corrosion protection.

CE Certification

The systems on offer comply with DIN EN 14010 and EC Machine Directive 2006/42/EC. Furthermore, this system underwent voluntary conformity testing by TÜV SÜD.

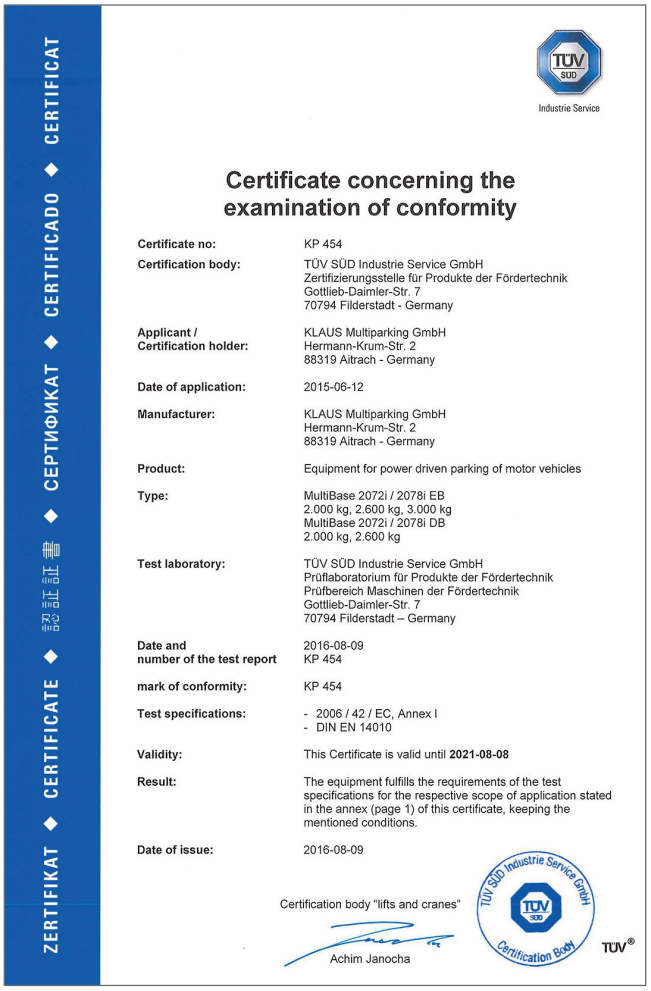

ZERTIFIKAT ◆ CERTIFICATE ◆ 認証証書 ◆ СЕРТИФИКАТ ◆ CERTIFICADO ◆ CERTIFICAT

TÜV SÜD Industrie Service

Certificate concerning the examination of conformity

Certificate no:	KP 454
Certification body:	TÜV SÜD Industrie Service GmbH Zertifizierungsstelle für Produkte der Fördertechnik Gottlieb-Daimler-Str. 7 70794 Filderstadt - Germany
Applicant / Certification holder:	KLAUS Multiparking GmbH Hermann-Krum-Str. 2 88319 Aitrach - Germany
Date of application:	2015-06-12
Manufacturer:	KLAUS Multiparking GmbH Hermann-Krum-Str. 2 88319 Aitrach - Germany
Product:	Equipment for power driven parking of motor vehicles
Type:	MultiBase 2072i / 2078i EB 2.000 kg, 2.600 kg, 3.000 kg MultiBase 2072i / 2078i DB 2.000 kg, 2.600 kg
Test laboratory:	TÜV SÜD Industrie Service GmbH Prüflaboratorium für Produkte der Fördertechnik Prüfbereich Maschinen der Fördertechnik Gottlieb-Daimler-Str. 7 70794 Filderstadt – Germany
Date and number of the test report	2016-08-09 KP 454
mark of conformity:	KP 454
Test specifications:	- 2006 / 42 / EC, Annex I - DIN EN 14010
Validity:	This Certificate is valid until **2021-08-08**
Result:	The equipment fulfills the requirements of the test specifications for the respective scope of application stated in the annex (page 1) of this certificate, keeping the mentioned conditions.
Date of issue:	2016-08-09

Certification body "lifts and cranes"

Achim Janocha

TÜV SÜD Industrie Service GmbH Certification Body

TÜV®

Page 1 Section Car data
Page 2 Height dimensions
Page 3 Function Width dimensions
Page 4 Approach Load per parking space
Page 5 Load plan
Page 6 Electrical installation
Page 7 Technical data
Page 8 To be performed by the customer Description

To be performed by the customer

Safety fences

Constraints according to DIN EN ISO 13857 must be put in place on three sides (all except the entrance side), unless buildings border the pit.

Numbering of parking spaces

Consecutive numbering of parking spaces.

Building services

Any required lighting, ventilation, fire extinguishing and fire alarm systems as well as clarification and compliance with the relevant regulatory requirements.

Drainage

For the front area of the pit we recommend a drainage channel, which you connect to a floor drain system or sump (50 x 50 x 20 cm). The drainage channel may be inclined to the side, however not the pit floor itself (longitudinal incline is available). For reasons of environmental protection we recommend to paint the pit floor, and to provide oil and petrol separators in the connections to the public sewage network.

Strip footings

If due to structural conditions strip footings must be effected, the customer shall provide an accessible platform reaching to the top of the said strip footings to enable and facilitate the mounting work.

Marking

In compliance with DIN EN 14010, 10 cm [4”] wide yellow-black markings compliant to ISO 3864 must be applied by the customer to the edge of the pit in the entry area to mark the danger zone.

Wall cuttings

Any necessary wall cuttings according to page 1.

Electrical supply to the main switch / Foundation earth connector

Suitable electrical supply to the main switch must be provided by the customer during installation. The functionality can be monitored on site by our fitters together with the electrician. If this cannot be done during installation for some reason for which the customer is responsible, the customer must commission an electrician at their own expense and risk.

In accordance with DIN EN 60204 (Safety of Machinery. Electrical Equipment), grounding of the steel structure is necessary, provided by the customer (distance between grounding max. 10 m).

If the following are not included in the quotation, they will also have to be provided / paid for by the customer:

– Mounting of contactor and terminal box to the wall valve, complete wiring of all elements in accordance with the circuit diagram
– Costs for final technical approval by an authorized body
– Main switch
– Control line from main switch to hydraulic unit

Description Single platform (EB) and Double platform (DB)

General description

Multiparking system providing independent parking spaces for 2 cars (EB), 2 x 2 cars (DB), one on top of the other each.

Dimensions are in accordance with the underlying dimensions of parking pit, height and width.

The parking bays are accessed horizontally (installation deviation ± 1% for correct drainage of platforms).

Due to the special lifting and bearing construction lifting of the doors is not restricted.

Vehicles are positioned on each parking space using wheel stops on the right side (adjust according to operating instructions).

Operation via operating device with hold-to-run-device using master keys.

Operating instructions are attached to each operator's stand.

Multiparking system consisting of:

– 2 steel pillars (mounted on the floor)
– 2 sliding platforms (mounted to the steel pillars with sliding bearings)
– 2 platforms
– 1 electro-hydraulic synchronization control system (to ensure synchronous operation of the hydraulic cylinders while lowering and lifting the platform)
– 2 hydraulic cylinders
– 2 rigid supports (connect the platforms)
– 2 chains and pocket wheels
– 2 automatic hydraulic safety valves (prevents accidental lowering of the platform while accessing the platform)
– Dowels, screws, connecting elements, bolts, etc.
– The platforms and parking spaces are end-to-end accessible for parking!

Platforms consisting of:

– Platform base sections
– Adjustable wheel stops
– Canted access plates
– Side members
– Central side member [only DB]
– Cross members [DB long and short cross members]
– Safety railings – along the upper and lower platform (if required)
– Screws, nuts, washers, distance tubes, etc.v

Hydraulic system consisting of:

– Hydraulic cylinder
– Solenoid valves
– Safety valves
– Hydraulic conduits
– Screwed joints
– High-pressure hoses
– Installation material

Electric system consisting of:

– Operating device (Emergency Stop, lock, 1 master key per parking space)
– Control unit with wiring harness and sensors

Hydraulic unit consisting of:

– Hydraulic power unit (low-noise, installed onto a console with a rubber-bonded-to-metal mounting)
– Hydraulic oil reservoir
– Oil filling
– Internal geared wheel pump
– Pump holder
– Clutch
– AC-motor
– Junction box unit with contactor, motor protection switch and control fuse
– Test manometer
– Pressure relief valve
– Hydraulic hoses (which reduce noise transmission onto the hydraulic pipe

We reserve the right to change this specification without further notice

KLAUS Multiparking reserves the right in the course of technical progress to use newer or other technologies, systems, processes, procedures or standards in the fulfillment of their obligations other than those originally offered provided the customer derives no disadvantage from their so doing.