Renewable and Sustainable Energy Reviews 103 (2019) 515–528

Contents lists available at ScienceDirect

Renewable and Sustainable Energy Reviews

journal homepage: www.elsevier.com/locate/rser

Nanoparticle emissions from residential wood combustion: A critical literature review, characterization, and recommendations

Rebecca Trojanowski[a,b], Vasilis Fthenakis[a,*]

[a] Center for Life Cycle Analysis, Earth and Environmental Engineering, Columbia University, New York, NY, United States
[b] Sustainable Energy Technologies, Brookhaven National Laboratory, Upton, NY, United States

ARTICLE INFO

Keywords:
Biomass
Wood stoves
Nanoparticle
Emissions
Regulations

ABSTRACT

The increased use of wood as a heating fuel in residential and small commercial buildings has increased concern about potential environmental and safety impacts, specifically particulate matter (PM) emissions in the nanometer range. Larger particles (> 2.5 μm) can be effectively removed from exhaust streams by emission control devices. However, nanoparticles (NP), due to their size, are more difficult to capture in exhaust flue gases. In addition, NPs have a higher surface to volume ratio, allowing them to absorb organic compounds, causing them to be more reactive than their larger counterparts. This review focuses on the NPs produced from residential wood heating devices. Current emission regulations do not reflect the NP count or type produced from residential wood combustion, although most published studies show that a significant portion of the particles produced during combustion is in the nano-size range. Fuel type, device type and combustion periods have all shown to impact, at various degrees, the NPs produced. Contrary to common expectations, it appears that modern units may generate a higher count of NPs, although emitting less particulate mass than older units. This investigation supports arguments of needed particle type and count regulations in addition to the current mass based emission regulations. In addition to a critical review and analysis, recommendations are made regarding future testing, monitoring and environmental impact studies that address the significance of NP emissions.

1. Introduction

The increased use of wood as a heating fuel in residential buildings has increased concern about potential environmental health and safety impacts. The increased use is partially due to the historically low cost of wood fuel, but also because the technology offers a renewable alternative to fossil fuel heating. In addition, single room heaters using either pellets or cordwood can help offset significant amounts of home heating oil or propane without the larger investment of replacing a boiler. As the use of biomass is encouraged as a rewewable fuel source and considered to be an important player in the transition to renewable fuel sources, it suffers from higher particulate matter (PM) emissions in comparison to oil or natural gas fired systems. The World Health Organization estimates that more than 50% of the world population uses biomass fuels for cooking and heating [1] and these PM emissions from residential wood-smoke have corresponded to declines in local air quality in Europe [2–4].

As of 2015, residential wood combustion (RWC) devices were responsible for more than 45% of $PM_{2.5}$ (particles with an aerodynamic diameter < 2.5 μm) in Europe [5]. Similarly, biomass burning in the United States (US) accounts for more than one-third of primary $PM_{2.5}$ emissions and the US Environmental Protection Agency (EPA) lists the three largest sources of $PM_{2.5}$ as utility fuel, RWC and prescribed burning (land management tool to maintain forest health) [6]. Specifically in New York State (NYS), residential wood heating contributes 275% more $PM_{2.5}$ than all industrial, commercial and institutional (ICI) heating emissions combined, 550% more $PM_{2.5}$ than the electricity generation sector, and 35% more $PM_{2.5}$ than the transportation sector; overall, contributing more than 90% of the $PM_{2.5}$ emissions in NYS even though it only provides less than 2% of NYS overall heating needs [7]. Similar trends are reported by the Danish Ecological Council; the number of particles per unit volume of wood burning exhaust in Denmark, were found to be than 230 times greater than those from diesel trucks [5].

2. Background

Especially of concern are emissions from wood combustion of submicron particles, i.e., nanoparticles (NPs) (< 300 nm) The absorbed compounds in some cases may be potentially carcinogenic and induce a

* Corresponding author.
E-mail address: vmf5@columbia.edu (V. Fthenakis).

https://doi.org/10.1016/j.rser.2019.01.007
Received 22 March 2018; Received in revised form 10 December 2018; Accepted 1 January 2019
Available online 15 January 2019
1364-0321/ © 2019 Elsevier Ltd. All rights reserved.

more pronounced pro-inflammatory response than larger particles of the same material [8–11]. Depending on the combustion source, small amounts of sulfates, nitrates, and metals may also be present along with adsorbed volatile organic carbon (OC) [12]. Perhaps the combination of metals present, organic compounds, persistent free radicals and/or low solubility or degradability are the likely source of observed health impacts of airborne PM such as oxidative stress [9,13,14]. A review by Bøman et al. discussed exposure effects such as asthma, respiratory symptoms, mortality, and declined lung function had a stronger correlation in areas where residential wood smoke combustion was a major source of PM [4]. Other reports show that NPs can become suspended in wash water, make their way into organisms and eventually cause serious health effects to humans through the food chain [15].

Many studies have looked at the health effects associated with wood combustion NPs, but to date little is known about the environmental fate of these NPs and their eventual pathway to humans. One review indicates that 99% of the total number concentration of particles in the ambient atmospheric environment are made up of NPs 300 nm and smaller [8]. However, there is no systematic description of anthropogenic NPs and their occurrence, fate, and effects on the environment [16]. Several studies showed that ultrafine NPs emissions (< 100 nm) may affect the climate and this is dependent on the chemical properties of the aerosol [3,17,18] and their residence times [16,19].

It is known that black and brown carbon has a significant role in altering the climate [20,21]. Nienow et al. [12] report that approximately 15% of all atmospheric particles between the sizes of 1 and 1000 nm in diameter are soot, which are mostly elemental carbon (EC), and typically are non-toxic to cells but are known to absorb sunlight and contribute to global warming. Black carbon NPs are of particular concern since, in addition to absorbing light, they are inefficient light scatters as they are much smaller than the 400–700 visible light spectra [19]. RWC not only contributes to photochemical smog [22,23] but has been reported to be a significant source of black and OC [24]. A recent study shows that 56% of the black carbon soot in Europe is caused from RWC and with a projected increase in its use to meet renewable energy goals, the contribution of black carbon soot is expected to grow upwards to 70% by 2030 [5].

The accumulation of NPs in the environment may not only induce climate change but also affect atmospheric visibility decreasing the sun's light intensity, and have an effect on the environmental hydroxyl radical concentration, ultimately depleting the ozone. Smita et al. [25] summarized a scenario in South Asia where 70% of the brown clouds are made up of soot from biomass combustion in cook stoves. They correlated the brown clouds to glacial melting, reduced sunlight and extreme weather conditions which have impacted local agricultural production. The authors also discussed the NPs reaction with hydroxyl radicals in the environment and their immediate binding due to the very reactive nature of both. Typically, hydroxyl radicals degrade pollutants due to their strong oxidation nature, however with the NP reaction, the free radicals are no longer available and an increase in pollutants and greenhouse gases are observed.

In addition to NPs affecting the atmospheric chemistry and inducing climate changes, NPs can eventually deposit onto soils and bodies of water causing secondary contamination and other environmental effects [19,26]. Hata et al. found wood combustion NPs (in comparison to larger particles) had the largest fraction of particle-bound water soluble OC which is known to contribute to cloud condensation nuclei generation [27] but may also interact with the natural OC in water; dissolved OC can carry trace metals and other contaminants [28] that are otherwise insoluble and immobile causing carcinogenic effects on organisms [22].

Larger particles (greater than 2.5 μm) typically derive from the inorganic fraction of the fuel in the form of ash, or may be agglomerations of fine and ultrafine particles, but they can be successful removed from exhaust streams by emission control devices [23] such as electrostatic precipitators (ESP), cyclones, and baghouses. Nanoparticles, due to their size, are more difficult to capture in exhaust flue gases. Additionally, commercial biomass heating systems (office buildings and those used for district heating) are more efficient and equipped with emission control devices mentioned above. However, residential units often do not have these PM removal systems[1] and so they are major sources of PM in the air. Therefore, this review paper focuses on the NPs produced from residential wood heating devices. In addition, the paper offers suggestions for future studies from an environmental perspective as the use of wood combustion devices continues to increase.

3. Residential wood combustion systems

Residential systems may be classified as primary heaters or secondary heaters. Primary heaters include biomass boilers or furnaces which serve to heat an entire home and may also include domestic hot water. Secondary heaters, also commonly referred to as 'room heaters', are used as a supplemental heat source, particularly for one room, and in some cases may only be used for ambience. This category typically includes wood stoves, masonry stoves, and fireplaces and fireplace inserts.

Wood heaters may be manually or automatically fed. Manual systems are typically fed in batches with fuel types such as cordwood (logs or split wood), cribwood (dimensional lumber), and briquettes. Automatically fed systems transport wood chips and pellets via an auger to the combustion chamber; they may be top fed, horizontally fed or bottom fed [7]. Systems which are automatically fed or include controls, require electricity to operate the fuel screw, glow-plug ignitor and fans, whereas manual systems may not require electricity. Traditional stoves that lack automatic controls do not need an electric source and simply rely on the operator to ignite the fuel source and control air dampers. Advanced units may include fans, lambda (oxygen), temperature sensors, and automatically controlled dampers that require an electric source to operate. Some wood heater designs also promote the use of duel fuel i.e. a manually fed cordwood and automatically fed pellets

3.1. Primary heaters

One type of primary wood heating appliance is the wood-fired hydronic heater, a technology that has been evolving rapidly in the U.S. and Europe over the past decade. Hydronic heaters heat water, or otherworking fluid, and then pump the fluid to the home via baseboard or traditional cast iron radiators. Hydronic systems are most common in Europe and the Northeast US. Older wood-fired hydronic technology involved outdoor-installed units with large integral water volumes and updraft combustion (commonly referred to as outdoor wood boilers, OWBs). These units operate with air flow controls that set the firing rate to maintain a target boiler water temperature. These units control combustion by just opening and closing a damper operated by an aquastat [7]. During periods of low-heat demand, these units go into a "slumber" or smoldering combustion mode, (described in Table 1), which can create high emissions. Also, these units have very large combustion chambers allowing them to be easily overfilled potentially causing a hundred-pound charge of wood in a boiler with a nominal output capacity in the range of 100,000 Btu/h to smolder.

Hydronic heaters may be classified as single-stage or two-stage gasification boilers. Single-stage units only involve one chamber for combustion and an air damper or two. These units are typically less efficient as unburned gases leave the flue. Two-stage gasification systems involve two chambers; one chamber to burn most of the biomass

[1] Some stoves may be sold with catalyst; however, this practice is more common in the US than in the EU. Recently a prototype of a residential boiler with a mini ESP was introduced in the EU but this is not a common practice yet [84].

Table 1
Common Operation Conditions for Residential Wood Combustion Devices.

Operating Condition	Characteristics
Start-up or ramp up	Fuel was just ignited and the unit ramping up to its full output, fan speeds (if applicable) and/or dampers are fully open; CO concentrations tend to be high as well as PM with low to moderate O_2 values.
Steady state operation	Unit is running at full output, max fan speed (if applicable), fully open dampers, high burn rate of fuel, low CO, low PM, low to moderate O_2 values.
Intermediate or modulation or partial load	Unit is running at less than full output because heat demand has been met; fan speeds are ramped down (if applicable), partially closed dampers; low to moderate burn rate of fuel, slowed combustion.
Slumber	Unit has overheated or met heat demand and can no longer modulate to slow combustion and reduce output. Dampers at this point may be fully closed or barely open to maintain a fire; in the case for a manual system, fans (if applicable) are off; CO concentration tend to be very high but can become low towards end of slumber, combustion is very low or stopped.
Burn-out (i.e., end-phase)	Fuel is almost consumed; high O_2 values; CO values can range from low to high depending on the unit.

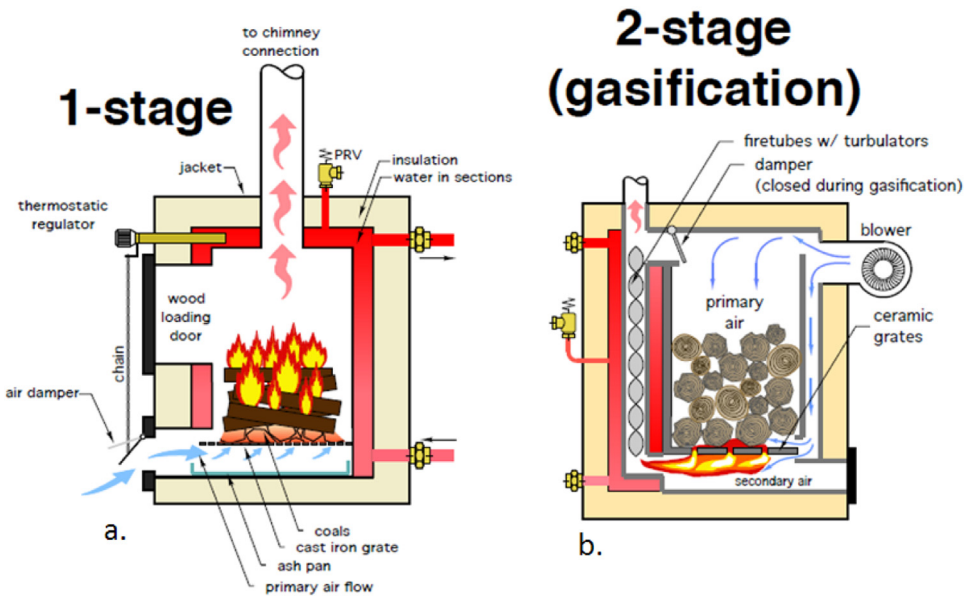

Fig. 1. Schematic of hydronic wood heater. a) single-stage unit b) two-stage gasification [29] (Courtesy of John Siegenthaler P.E.).



Fig. 2. Hydronic heater integrated with heating system. Shown here is the unit integrated with a forced hot air furnace, but other integrations may include radiant floors, radiators, or baseboards [30].

and the second to burn the off-gases not fully combusted in the first chamber; this typically involves the need for a fan or blower to push the gases into the second chamber. Burning the exhaust gases allows for a more complete combustion and ultimately a gain in efficiency. Differences between the two systems are shown in Fig. 1 below. In both scenarios below, hot water would leave the system and be piped to the home for heating and/or domestic hot water use. Fig. 2 shows how the system may be integrated with the home's heating system.

The newest technologies for wood boilers are characterized by their low mass (small water volume) and smaller combustion chambers in comparison to traditional OWBs. These new technologies are two-stage combustion designs with oxygen and/or temperature sensors and an advanced control system; they operate with full or partial external thermal storage, include multiple air dampers and fans to modulate and/ or stage combustion, and are intended for use either indoors or outdoors. These units contain approximately one-tenth the water volume of older units internally but are installed with large external thermal storage. Fig. 3 below shows an example of an advanced wood-fired boiler. The concept is that these units will serve primarily to heat the storage tank while running at optimal, full-output condition. Heat from the storage will then be used to heat the home. With the integration of air supply controls, temperature, and or thermal storage, the efficiency and emissions (mass based) performance is significantly improved due to the optimization of the air supply to fuel ratio [7].

Thermal storage allows boilers to reduce cycling which in turn may reduce emissions from start-up and shut down periods.

Similar to hydronic heaters, furnaces also are designed to burn cordwood, wood chips or pellets to heat an entire home and typically are controlled by a home's thermostat. However, the heat from a furnace is distributed as a gas (hot air) through ducts rather than as a liquid in pipes which is pumped through a home. Fig. 4 below shows the difference between a hydronic and forced air OWB. Typically wood fired furnaces are located indoors. Johansson et al. [31] describe in detail common wood boiler designs for up-draught combustion while a NYSERDA report details down-draught combustion devices [7]. Down-draught boilers pull air in and use it to fully combust unburned gases below the active flaming area. Up-draught boilers pull air in and heat it

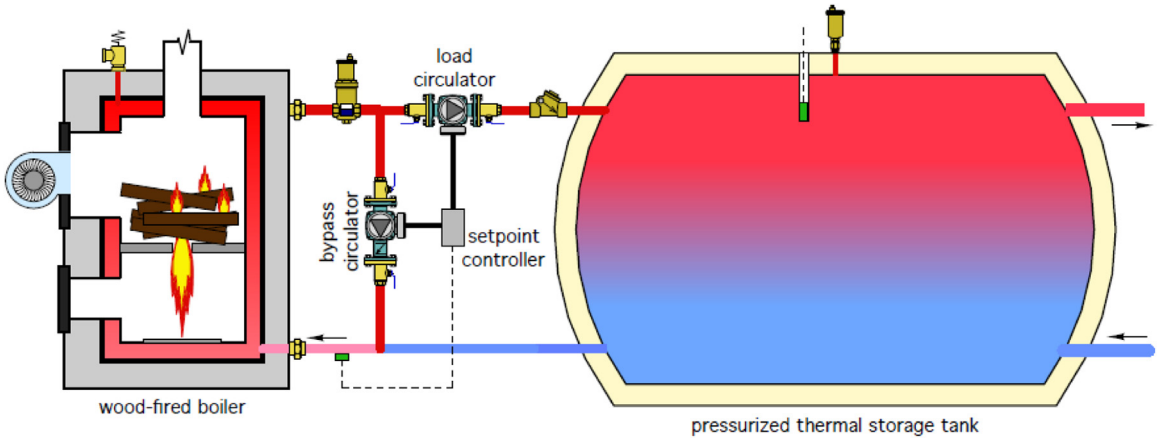

Fig. 3. Advanced wood-fired boiler with thermal storage [29] (Courtesy of John Siegenthaler P.E.).

above the active flaming area. Modern/advanced boilers typically employ down-draught combustion while conventional boilers and wood stoves use up-draught combustion

3.2. Secondary heaters

Unlike a boiler or furnace, a wood stove is not controlled by a central thermostat to meet the home's heating demand. Wood stoves only heat a small local area and are considered to free standing and enclosed, unlike an insert or open fireplace. Older stove technology (cordwood) typically uses an updraft burn which introduces primary air into the combustion chamber at the bottom of the stove and under the fuel injection causing the air and flames to naturally draft up. These stoves include a manual damper for the user to adjust to their desired heat output. Some newer stoves introduced advanced controls to adjust the dampers automatically (based on oxygen, temperature and/or thermostat setting) as well as gasification and secondary combustion techniques which push combustion gases into chambers below the fuel further burning the gases, thereby improving both efficiency and emission performance.

Stoves may also be categorized as catalytic or non-catalytic. Catalytic stoves employ a ceramic honeycomb design coated with a rare-earth metal catalyst placed in the path of the flue gas to enable combustion of the volatile gases at lower temperatures [7]. Therefore, the construction and air supply vary between the two. Often in older technology especially, the user of the stove is responsible to 'engage' the catalyst by closing a damper and redirecting the fuel gas path based on a stove temperature.

3.3. Fire places and masonry heaters

A third category includes units that may be used also as secondary heaters but are not regulated by the US EPA. This category includes fireplaces and masonry heaters. Fireplaces generally have no controls associated with their design and simply exhaust flue gases up a chimney due by natural convection. Fireplaces are not regulated in terms of their emissions as they are classified as a recreational burn, not a primary source of heat [34].

Masonry heaters similarly to fireplaces have no control mechanisms, are not a free standing device and typically built into the home's blueprint. These units operate at a single high burn rate only, rapidly heating the brick mass and thereby avoiding some emissions typically associated with low burn rate operations. They are high mass units with heat exchanger channels for the hot flue gas to pass through the masonry bed before exhausting to the outdoors. Thus the masonry material stores heat and release the heat stored over a prolonged period of time.

4. Fuel types

Wood heater designs range from single fuel systems (e.g., cordwood, cribwood, pellets, wood chips, and briquettes (also called biobricks)), to multi-fuel systems which have been designed to burn pellets, corn

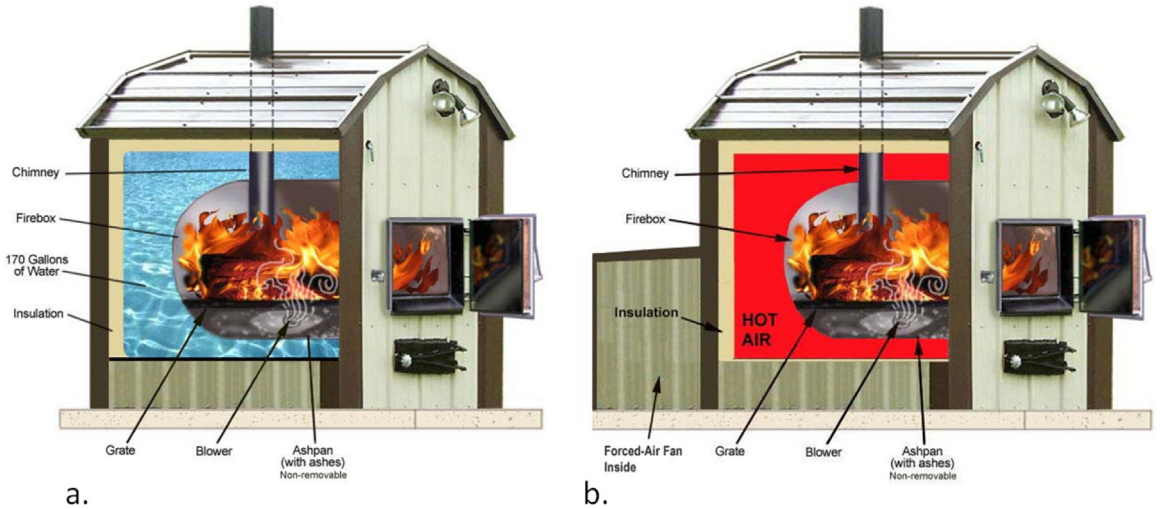

Fig. 4. Outdoor wood boilers (OWBs) a. hydronic [32] b. forced hot air [33].

husks, wood chips, and olive pits. In addition to the system design itself, fuel type may also impact emissions, efficiency, and performance. Fuels that contain bark for instance are known to contain many contaminants as trees will push the "unwanted" matter to their leaves or bark. In summary Jensen found mineral compounds are up to 10 times more abundant in bark than in wood, with bark ash contents up to 60%wt, predominantly calcium, silica, and phosphorus [35]. Additionally, phenolic acids in bark are mostly found in outer bark cells. Low molecular weight extractives are often very abundant in bark such as alcohols, resin acids, alkaloids, and terpenes. There can also be small amounts of essential oils (volatile low molecular-weight terpenes) (e.g. incense cedar, ponderosa pine, and eucalypts, among many others) [36]. Moisture content of biomass fuels are also another key factor in the ignition time and devolatilization rate [37], as well as the overall combustion performance [38,39].

The elements that may be found in a solid biomass fuel, and the emission from their combustion, also depend on where the tree was grown. Specifically, trees living in areas with toxic air pollution or ground water contaminants may have toxic metals accumulated in the bark and leaves [40]. In the sections below various common fuel types are described in some detail.

4.1. Cordwood

Cordwood or as more commonly referred firewood, is un-treated, with or without bark and air-dried wood. Cordwood can vary in terms of species (fuel density) and pieces of the same species further may vary in moisture content, the amount of bark covering the surface, weight, and size. To complicate this fuel further, combustion of cordwood is subject to natural chimney draught, cannot be 'turned on or off' like automatic fuels can with instantaneous ignition, and is subject to various lighting techniques.

To minimize this variability and increase best combustion practices, stove or boiler manufacturers typically recommend their systems be fired with either two main types of cordwood: deciduous or hardwoods and coniferous or evergreens or softwoods. Examples of hardwoods include oak (red or white), maple, or beech and softwoods include pine, spruce or Douglas Fir. Traditionally, round logs are cut into four to six pieces to improve the surface area and combustion performance. Manufacturers typically recommend seasoned (air-dried) cordwood for use in their devices with moisture ranges on a dry basis of 16–20%, however some units have claims to the ability to burn green wood (moisture levels above 35%). In addition, piece size, amount, and loading procedures are listed in manufacturer's written instructions and device manuals. There are currently no known cordwood fuel specifications to ensure consumer's fuel meet the recommendations of manufacturers in either the US or Europe, however a technical committee in Europe is currently drafting standards for cordwood (CEN/TC 335) [41].

4.2. Pellets

Pellet fuel or more commonly referred to as just pellets, are solid biofuels made of compressed organic matter or biomass. Biomass feedstock for pellet production includes wood shavings, wood chips, grasses, straws, lumber mill scrap, and wastes from energy crops. Typically pellets use a sawdust type feedstock with little to no bark so the use of a hammer mill is common as a first step to treat the raw material. The raw material may be dried if exposed to outdoor weather elements or if the raw material was green. During the processing state high temperatures cause the lignin to break down and melt which will later solidify, holding the pellet together. In some pellet plants a small amount of cornstarch or flours may be added to act as additional "glue". Finally, the processed material is pushed through a pellet die at high pressures where the pellet is cut to the desired length (typically on the order of 0.6–3.8 cm [42]).

Pellets are commonly used in automatic feed systems. They are a more consistent fuel type due to their uniform size, shape, and moisture content. They are delivered to the end-user either by delivery trucks (similar to oil) or in 18 kg plastic bags. High quality pellets include those made of sawmill waste; grasses, if used, often have higher ash content, chlorine, and sulfur levels which can cause the combustion chamber to corrode over time, making them less desirable unless additives are used [43].

Pellets are not to be produced from recycled material such as treated or painted lumber as the emissions from burning materials of this type would produce toxic emissions or large variations in burns. Required certification programs exist in most European countries (ENplus) and Canada (CANplus) to protect pellet consumers and ensure the procurement of a high quality pellet [44]. Unlike Europe, pellets fuel in the US are only recommended but not mandated to meet a certification. The Pellet Fuel Institute (PFI) recently launched a third-party accreditation standards program to provide specifications for residential and commercial-grade pellet fuel to ensure the consumer would purchase high quality pellets [45]. The Northeast States for Coordinated Air Use Management (NESCAUM) sampled pellet fuels from 100 difference companies and, despite US standards, [7], some pellet fuels did not meet standards. In some cases, the pellets did not meet the specified moisture content, showed seasonal variability, exceeded standard for chloride, and many samples had higher than normal values for Arsenic (As), Cadmium (Cd), and Mecurgy (Hg).

4.3. Wood chips

Biomass fuels with particle sizes typically smaller than 5 cm × 5 cm × 5 cm are commonly classified as wood chips. Wood chips have 2–3 times lower bulk density than pellet fuel [39], they may contain bark and their moisture content is typically higher than that of pellets.

Higher quality or lower moisture wood chips typically are chipped from seasoned cordwood by a fuel grade chipper with set screens to achieve a uniform desired size. As biomass tends to re-absorb moisture if left uncovered, proper care is necessary to maintain lower moisture content chips after chipping. In some cases solar heat (hot air for drying) has been employed to produce high quality [46–48].

Lower quality, higher moisture content chips may be chipped by a general agricultural chipper directly after removing a tree (allowing for no seasoning of logs and in some cases leaves, grass and dirt may also be included) which tends produce a shredded material, producing longer pieces of wood, twigs, dust, and a variety of non-uniform sizes. Wood chips produced in this type of condition would have a much lower heating value than those of uniform size, lower moisture, and free of dust. Similar to cordwood there are no known specifications to ensure consumer's fuel meet the recommendations of manufacturers in either the US or Europe, however a technical committee in Europe is currently drafting standards for chips as well (CEN/TC 335) [41].

4.4. Briquettes

Biomass briquettes similar to pellets, use biomass sawdust or fiber type feedstock (straw, paper, agricultural waste, leaves, and so on), and use a densification process making them uniform in size and easy to store and transport but are pressed into a rectangular shape resembling a traditional red building brick or larger disk or solid or hollow log shape of 7–25 cm in length and 10 in 30 cm in diameter. If the fines are heated to a temperature which breaks down the biomass lignin under high pressure no binders for the briquettes are needed [49] but in some cases, if the fibrous material is not heated or processed under high pressure, a binder material is used such as molasses, starch, or even cow dung and cactus [50].

Depending on the type of raw material, the first steps of production are sieving, drying, or crushing, followed with preheating, densification, cooling, and packing the briquettes [49]. Studies show higher

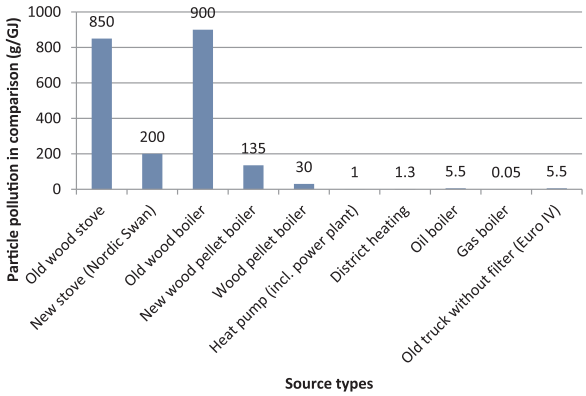

Fig. 5. Particle pollution of different heat sources compared with diesel truck-data from Denmark adopted from [5].

quality briquettes are produced under higher processing pressures and temperatures, longer dwell times, and increased binder contents [51,52]. Briquettes may be used in automatic or manually fed systems; the typically automatic systems only include primary heaters or commercial grade systems.

5. Combustion conditions influencing nanoparticle emissions

Wood-heating appliances have highly variable combustion conditions which cause large variations in the physicochemical characteristics of the emitted particles [21]. The four main combustion conditions explored in studies typically include start-up (initial burn period), steady state (efficient), intermediate (a modulating stage with an output lower than the unit's maximum) and burn-out (final phase of the burn). These periods are most often identified by the carbon monoxide (CO), carbon dioxide (CO_2), oxygen (O_2), and mass of fuel values. The steady state phase is where the maximum efficiency is often achieved and PM emissions are reduced. Burn-out is often described as the charcoal phase. Some heaters have the ability to modulate down via control strategies such as those mentioned in the advanced boiler systems or manually controlling the draught damper in a stove for instance allowing for 30% of full output or a 'low' burn. The most common operating conditions and their characteristics are listed in Table 1 above.

One additional common operating characteristic, but certainly a less desirable, is incomplete combustion. Manufacturers often include instructions to users which would prevent such practice. However, many units will operate in an incomplete combustion mode if poor practices are followed. Incomplete combustion is caused by small values of the three most important 'T's' in combustion; time, temperature, and turbulence. Too short of a residence time to allow for proper mixing, inadequate mixing of combustion and fuel in the combustion chamber due to a lack of turbulence or oxygen, and low combustion temperatures or cold zones in the combustion chamber are examples for incomplete combustion parameters [53,54]. Characteristics of incomplete combustion are also an increase in volatile hydrocarbon emissions and CO. The constituents of fine particle emissions during incomplete combustion are organic matter, elemental carbon, and fine ash [55].

Typically, biomass heating systems are able to operate at a high efficiency and low emission level in their steady state, full output mode. However, when inefficient systems are used, poor operating techniques are employed, or poor fuel choices are made, all causing for an incomplete combustion, higher PM emissions occur. A Swiss study pointed out emissions could be up to 100 times higher if a stove was not operated properly [5]. In addition, if an advanced system's heating load is decreased, cordwood and automatic wood-fired boilers (pellet and chips) may have trouble modulating (controlling the burn rate/output through use of fans and or dampers), causing them to cycle frequently resulting to higher PM emissions and lower efficiency.

Manual and automatic feed heaters (specifically boilers) rely on different mechanisms to meet the heat demand. Automatic feed boilers can modulate down to a lower burn if they sense they are approaching the heat limit and then go into a burn-out period to be restarted again by an electric ignition when there is a call for heat again. Manually fed boilers on the other hand, cannot restart automatically and so are forced to 'slumber' their fuel bed by shutting air dampers and slowing the rate of fuel combustion. In some advanced technologies the boilers have the ability to modulate down slowly and maintain a 30% of nominal output without going into a full 'slumber'. Once there is a call for heat again, these boilers will open the air dampers and adjust the fans to achieve their full output once again. Gaegauf et al. [56] reported the particle size distribution of batch-wise fired appliances (wood stoves) varied significantly during a burn cycle, while wood log and continuous fed boilers showed a fairly constant particle size distribution. Beyond the difference in size distribution of the emitted particles, differences in the particle's properties exist which will be discussed in detail below. These differences are likely to influence the biological effects induced by wood smoke particles [10].

Studies have shown combustion conditions and the resulting particles strongly depend on fuel type, combustion technology, and type of operation [3,10,20,21,56–59]. One study in particular detailed the emissions of pellets in a pellet boiler and pellet stove, wood chips in a wood chip boiler, and two different cordwood species in a cordwood boiler and cordwood stove. The study found significant differences in terms of emissions factor (mg/MJ), even in the cases when spruce or beech cordwood was used in the same stove run at steady state; 67 and 93 mg/MJ, respectively [60]. Additionally, the study found the period of combustion, cold start or steady state had a significant impact in terms of emission production, for some cases ten times greater emissions output (mg/MJ) were observed.

Fig. 5 shows emission factors for various type of wood-heating appliances in comparison to gas and oil boilers, district heating and heat pumps. It is shown that older, conventional wood combustion technologies have the highest emission factors. The highest emissions seen in older units are due to smoldering conditions and limited heat-storing, so combustion gases are less burnt than in modern units [31]. A review in terms of wood smoke health perspectives by Bølling et al. show that smaller particles (20–125 nm) are more common amongst logwood, pellet and chip advanced boiler units while open fireplaces and conventional (old) stoves produce nanoparticles in the range of 50–600 nm [10]. This suggests that as conventional units are displaced by modern, more efficient and "cleaner" systems, although the total particulate emissions are reduced, the number of NPs may increase. However, this is not accurately represented by current regulatory gravimetric measures as NPs contribute very little mass even when present in significant numbers.

6. Nanoparticle emissions during residential wood heating

Current emission regulations from wood combustion devices in the US and EU are based on an overall mass concentration of particles and therefore NP levels may not be fully reflected in these emission regulations due to their low mass contribution. Further, as mentioned above NPs are of significant interest due to their risk of exposure in terms of health and the environment and so many groups have begun investigating (measuring, counting, and characterizing) the NPs associated with RWC. Results from a study involving 14 different appliance types, from cordwood stoves to automatic feed boilers showed 95% (particle number) of the particle emissions were smaller than 400 nm [56]. Hata et al. found in laboratory studies that more than 30% (of cumulative mass) of the smoke particles from the burning of biomass fuel had a mass that fell within a range of < 100 nm and this contributed greatly to the total levels of toxic PAHs and water soluble OC [22].

Bølling et al. [10] described three typical classes of wood

combustion particles based on chemical composition and morphology; spherical organic carbon particles, aggregated soot particles, and inorganic ash particles. Their review shows the smallest (aggregated soot particles, 20–50 nm) stem from combustion in conventional stoves, open fireplaces, and boilers fueled with cordwood, wood chips and pellets during high temperature and incomplete combustion phases. Saarnio compliments Bølling et al.'s description of particle classes by defining the main components of ultrafine particles as EC, OC, sulfates (SO_4^{2-}), and trace metals [3]. The following sections provide details on nanoparticle type, size, and or concentration found in their respective studies.

6.1. Cordwood stoves

Hosgood et al. [11] studied stoves from 15 Chinese homes which used coal or wood. Using an aerosol monitor, portable diffuser charger and electrometer, the group measured in real-time concentrations of NPs in the ambient air surrounding these homes. They also measured total $PM_{2.5}$ one to two meters from the main combustion source. Their findings suggested NP levels were not adequately accounted for in the total mass records due to NPs insignificant mass contribution to $PM_{2.5}$ measurements; this supports arguments of needed particle type and count regulations in addition to the current mass based emission regulations. Overall the group concluded there was a clear association between cooking and heating activities and elevated local NP levels [11].

Bologa et al. [61] tested an 8 kW stove with dry beech log wood and characterized the particle size distribution as well as the particle mass concentration. Their study showed the short start-up time of five to seven minutes produced more particles than the steady state and burn-out phases. Stack temperatures for the start-up, steady state and burn-out phases were ~100 °C, 300–330 °C and 160–180 °C, respectively. The group showed the start-up and steady state phases to have a mono-modal particle size distribution of 180 nm while the burn-out phase had the highest concentration of nano-sized particles with a bi-modal distribution of 180–200 nm and 30–40 nm.

Stack emissions were diluted from a welded construction stove and analyzed for their size distribution and total number concentration in the Gaegauf et al. study [56]. The start-up period of the stoves showed the largest particle size (i.e., average 200 nm), followed by the steady state period with an average of approximately 175 nm and the smallest particles (~ 30 nm) were found in the burn-out period. Similar to the study above, the lowest number concentration of particles less than (0.8 μm) was seen in the steady state period and the highest in the burn-out.

Hays et al. studied the polycyclic aromatic hydrocarbons (PAHs) associated with both Douglas Fir and White Oak at high (> 24%) and low (13%) moisture contents in a freestanding steel woodstove. Their experiments were run in compliance with US test standards, measuring only a steady state condition, and used an Electrical Low Pressure Impactor (ELPI) to collect filters and analyze the PAHs. They reported that the geometric mean diameter (GMD) is between 313 and 662 nm particles representing an accumulation mode [62]. The study showed low molecular weight PAHs preferentially segregated to fine aerodynamic diameter particles while higher molecular weight PAHs preferred coarse particles.

Hueglin et al. [63] studied the size and particle bound PAHs. A dilution sampling system was used to collect the particles, employing a scanning mobility particle sizer (SMPS) measure the particle size distribution. The stove had a 15 kW output and was fired with beech wood having a moisture content of 15–18%. The results showed the size distribution was strongly dependent on the state of the combustion process; start-up had the greatest particle concentration and largest mean diameter (approximately 260 nm), while the burn-out phase had the smallest mean particle diameter (approximately 60 nm) and intermediate phase had the lowest concentration (mean diameter approximately 107 nm) [63]. They also found that an increase in combustion in air supply impacted the particle size distribution; thus more oxygen caused an increase in the concentration of particles with smaller diameter. In addition, the study showed the particle bound PAHs decreased as oxygen levels increased; organic carbon was found to be 14% for burning conditions with increased O_2 and 57% when there was an absence of O_2 [63]. Particle bound PAHs were likely resulted from adsorption or condensation processes.

Kocbach et al. [64] collected particles from two wood combustion sources in Norway; one from a small farm heating from a wood stove and the other ambient sample collected from a residential neighborhood who uses wood as a major heating source, collecting all stages of the burn cycle. To confirm the particles collected were indeed all from wood sources, the group took direct samples from a common single-stage Norwegian stove with a high temperature combustion chamber (1000 °C) and another during an air-starved combustion condition with a low temperature of 500 °C. The results from X-ray microanalysis (XRMA) the study indicated Potassium (K) and sulfur (S) were the most abundant elements observed in the particles, while Silicon (Si) and Calcium (Ca) were present but slightly less. Kocbach et al. proposed the S levels in the carbon aggregates were not directly from the source but rather caused from a reaction with gases in ambient air. While the mean diameters for primary combustion particles for both locations remained very similar, roughly 39 nm ± 11 and showed consistent number of particles (226–239), the morphology differed from Transmission Electron Microscopy (TEM) analysis. The high temperature combustion produced carbon aggregations while the low temperature combustion did not have aggregates but carbon dominated spherical particles with diameters between 50 and 600 nm [64]. The NPs produced during the low-temperature combustion were similar to particle from smoldering forest fires.

A later study by Kochback et al. [65] collected NPs from a common single-stage Norwegian wood stove in a laboratory at high-temperature burn conditions, following Norwegian standards for testing wood stoves using a dilution tunnel. The group examined the NPs collected with High Resolution Transmission Electron Microscopy (HRTEM) to further determine the microstructure of the NPs. Similar to an earlier study [64], only carbon aggregates were found with the primary particles having a mean geometric diameter was 31 ± 7 nm from TEM analysis. From HRTEM analysis the group found the wood smoke NPs had one nuclei and a turbostractic structure; a concentric arrangement of layer places with a two-dimensional graphitic crystal structure, lacking the ordered stacking of graphite [66]. In addition, the group found the NPs to have a total PAH count of 9745 ng/mg.

Corsini et al. [67] studied an advanced cordwood stove with a nominal output of 8 kW. The stove has state-of-the-art triple air supply system with both primary and secondary air supply. They found the ultra-fine particle (UFP) number concentration was 7.0×10^8 particles/cm^3 with an average GMD of 50 nm for beech logs while the UFP number concentration was 1.9×10^8 particles/cm^3 with an average GMD of 99 nm for conifer logs. In addition, the group found the PAH concentration was significantly higher in UFP from wood logs, with conifer wood logs generating approximately 20X more PAH compared to beech wood logs [67].

6.2. Pellet stoves

A study by Commodo et al. found the smallest particles emitted from a pellet stove were on the order of 7–30 nm and were also the most abundant; on the order of $1{\times}10^4$particles/cm^3 [68]. The study also showed the amount of particles emitted after the transient phase decreased significantly, showing fewer particles (< 100 nm) in the steady state or stationary phase.

Corsini et al. [67] also studied an 11 kW top-fed pellet stove with two different pellets—beech and conifer. In agreement to the results from the cordwood stove, higher GMD diameter sizes were measured

with the soft-wood fuel than the hard-wood fuel with diameters of 75 nm and 38 nm. The average UFP number concentration for both the beech and conifer pellets was 1.1×10^8 particles/cm^3. These investigators reported that there were lower quantities of PAHs associated with the particles generated by the pellet stove than the cordwood stove. This was most likely due to more complete combustion in the pellet stove that ultimately produces less inflammatory active particles [67].

6.3. Cordwood boilers

Schmatloch and Brenn [58] found from two different cordwood boilers of 41 and 35 kW, a modern lambda (oxygen) controlled and fan assisted boiler and a traditional boiler, respectively, that the advanced unit produced slightly smaller particles. Using an ELPI and SMPS, the maximum of the number size distribution laid between 80 and 180 nm but varied significantly for different phases; highest concentrations were found during the start-up.

Johansson et al. [31] studied a variety of cordwood boilers which included old, traditional units and modern, advanced systems with power outputs ranging from 6 to 34 kW. Using beech cordwood with moisture contents of 15, 26, or 38% moisture content, the group investigated the effects of varying the load; running the systems at 100% full output or firing the units with a full or half load of cordwood. The group used an ELPI to determine the size distribution and Dekati Low-Pressure Impactor (DLPI) to determine the number particle concentration, diluting the samples before measurements. In addition, the group sampled for PAHs as well. Ultimately the group found older wood boilers had higher emission concentrations and un-oxidized compounds than modern wood boilers [31]. In fact, particle emissions were decreased by 70–80 times when comparing a modern wood boiler with a ceramic-lined burn-out zone, connected to an external heat storage tank. The PAHs were also found to be the highest in the case of the older wood boilers. Size distribution data indicated a peak mean diameter slightly greater than 60 nm and a decreasing trend in terms of concentration as particle diameter grew for both the older wood boilers and fan assisted combustion modern wood boilers. Interestingly, the diameter range shifted towards smaller particle sizes in the case when modern wood boilers were fired with a natural draught.

6.4. Automatic feed boilers

6.4.1. Pellet boilers

In addition to the cordwood boilers studied by Johansson et al. [31], the group included pellet boilers ranging from 3 to 22 kW in power output. The pellet boilers were operated at full or intermittent loads (less than 100% output) with pellet fuel having a moisture content of 7.6% or bark pellets having a slightly higher moisture content of 7.8% but significantly higher ash content of 0.5–3.7%, respectively. Two pellet boilers run at their full output of, 11 and 22 kW power output ignited with a pilot flame and electrical ignition, respectively, showed very similar mass distributions and maximum particle sizes of 130 nm. Experiments that involved the bark pellets showed an increase of mass concentration and a slight shift to larger particle sizes (approximately 220 nm). No obvious trend was observed between full and intermittent output in terms of particle size, only a very slight increase in mass concentration.

Bologa et al. [61] also characterized the particle size distribution from 20 kW and 32 kW pellet boilers with flue gas temperatures during steady state operation in the range of 170–180 °C and 120–140 °C, respectively. Similarly, to the cordwood stove tested by the same group, the steady state pellet boilers also had a mono-modal particle size distribution; however, there was a shift towards a smaller particle size, peaking at about 60 nm. Furthermore, the group showed a decrease in particle mass concentration for the pellet boilers as well; pellet boilers at 10–20 mg/Nm^3 vs the wood stove at 25–40 mg/Nm^3.

Mavrocordatos et al. [18] collected particles from a 15 kW pellet boiler flue for a detailed analysis of particles which included: particle count, size distribution, morphology, volume, elemental composition, and fractal analysis. Employing a SMPS, they found that the maximum in number concentration measured 80 nm. From Atomic Force Microscopy (AFM) and Scanning Transmission Electron Microscopy (STEM) the group found the individual particles of different shapes and aggregates with a highly compact structure. The group noticed when the particles were exposed to the electron beam in the STEM, after only a few minutes the smaller particles (< 100 nm) would disappear and the larger would reduce in size and to an inorganic residue consisting mostly of K, Chlorine (Cl) or S. Using an inductively coupled plasma atomic emission spectrometer (ICP-AES) the group was able to do an elemental analysis in addition to a total organic carbon (TOC) measurement by using a TOC-Analyzer. The analysis showed a TOC content of 370 ppm, the presence of K, Ca, S, Magnesium (Mg), Cl, Phosphorus (P), and Sodium (Na) in decreasing amounts (ppm) and traces of Iron (Fe), Aluminum (Al), Mg, and Zinc (Zn). From the analysis the group drew the conclusion that these wood combustion emission particles were likely inorganic salts that could dissolve easily in water [18].

Lamberg et al. [9] along with Kaivosoja et al. [69] studied a 25 kW modern pellet boiler using pine pellets. The group found the GMD to be 60 nm with a mean mass diameter (MMD) of 137 nm [9]. In addition, the total PAH emissions from particulate matter 1 μm and smaller (PM_1) emissions (PAH/PM_1) were extremely low, 0.00006%, with pyrene and fluoranthene as the most abundant. Kaivosoja et al. supported this work by characterizing the PM_1 by elemental analysis. The group found K was the main element found followed by Na, Cl, and S —suggesting that these elements were all in the form of alkali metal sulfates (SO_4) and chlorides (Cl^-) [69].

Gaegauf et al. [56] also measured the particle mobility diameter distribution of a 17 kW pellet boiler; diluted from a hot stack. They found a peak mobility diameter occurred at approximately 85 nm, but ranged from 12 nm to just below 400 nm.

6.4.2. Chip boilers

Using a 40 kW wood chip boiler, Torvela et al. [21] studied the chemical composition link with particle morphology and the effects of combustion conditions on particle type. These investigators looked at three combustion phases that they classified as efficient (low level of CO: 0–100 mg/MJ), intermediate (elevated CO: 100–1000 mg/MJ) and smoldering (high CO: 1000–5000 mg/MJ) [21]. Using a SMPS the mode number size distribution was 37, 150, and 250 for the efficient, intermediate, and smoldering conditions, respectively. They calculated a GMD for the efficient, intermediate, and smoldering conditions to be 25, 65, and 160 nm, respectively. However, even during the immediate and smoldering phases, a smaller number of particles with a dimension of 40 nm were observed.

Torvela et al. also identified via TEM the three main wood combustion particle types discussed in Bolling et al.'s review article [10]; ash, soot, and particulate organic matter (POM). The TEM images showed the ash as crystalline structures smaller than 100 nm, the soot particles chained as agglomerates with a primary particle size of 30–50 nm and the POM as an amorphous type with a course surface [21]. Table 2 below summarizes the findings of particle morphology and composition from Torvela et al.

Similar to the study of Mavrocordatos et al. [21] reported above, Torvela et al. found many of their species vaporized, decomposed, and changed during TEM analysis as well to the form crystals or bubbles inside particles, suggesting there may be semi-volatile hydrocarbons adsorbed on the surface of the soot. The group included an EC/OC (mg/MJ by thermal-optical), PAH (μg/MJ) by gas chromatography-mass spectrometry (GCMS) and PM_1(mg/MJ) by gravimetric analysis. In all cases, the largest counts for each were found in the smoldering condition and the lowest in the efficient burn.

Gaegauf et al. [56] also studied a wood chip boiler with a 70 kW

Table 2
Summarized Findings from Torvela et al. [21] Study Investigating NP PM emissions from Wood Chip Boiler.

Combustion conditions	Particle size and composition
Efficient	Particle diameter < 100 nm, irregular shape. Most particles were ash with crystalline nuclei; some identified as zinc oxide.
Intermediate	Particles appeared to be more spherical in shape with coating of organic matter. Sizes ranged from 40 to 150 nm with the largest particles making agglomerates that contained ash, soot and organic matter.
Smoldering	Almost all large branched soot agglomerates. Some inorganic elements were detected, but were mostly a mixture of soot and POM with a minor amount of ash.

output; diluted from a hot stack. The group varied the excess air during the operation of the chip boiler to study its effects on particle size and found that lower excess air values corresponded to lower particle counts and a shift towards higher diameters; 11.6% O_2 and 2.7% O_2 corresponded to diameters of 60 nm and 90 nm, respectively.

Hueglin et al. [63] continued their size distribution and particle bound PAH study focusing on a chip boiler with an output of 60 kW, and enriched the study by looking at the particles morphology as well. The group coupled the SMPS with an aerodynamic particle sizer (APS) to gain more information about the particles and measure larger diameters. The wood chip boiler was almost always run in a steady state full output mode as it is computer controlled and burned chips with a moisture content between 40% and 70%. Similar to the studies discussed already, particle emissions were dependent on operating conditions. Since the study only looked at steady state operation, the only varying parameter was the combustion air supply to mean the excess oxygen concentration target. The GMD size distribution had its lowest value when O_2 values were at 6.2% (68.6 nm) and its largest mean diameter size at an O_2 value of 11.6% (95.7 nm); the concentrations also followed a similar trend [63]. Overall, the NPs concentrations were reduced when the boiler was operated at an optimized O_2 value. The group found particles with a diameter greater than 1000 nm to be negligible when using the APS. Particles emitted from the chip boiler contained low amounts of semi-volatile compounds as well. SEM images revealed different types of particles; agglomerates of spherical compact particles, perfectly spherical particles representing coal fly ash, or irregular shaped crystalline platelets.

Another study by Leskinen et al. [70] focused their investigation on a wood chip-fired appliance. The group created a novel modular combustion unit which included a reactor and moving grate (not a marketed boiler with given output) which allowed them to produced three different combustion conditions: efficient (representing optimal conditions), intermediate (representing a partial load or poor air-stage settings) and smoldering (burn-out or smothering situation observed in batch combustion) with similar CO levels as seen in the work done by Torvela et al. [21]. The group provided detailed information on the system and fuel type which was both bark and stem wood chips from spruce and typical Finnish broadleaved trees with a moisture content of 24.3%. The group was able to measure the number and mass concentrations as well as the size and mass distribution in addition to characterizing the particle morphology, EC/OC, elemental and ion analyses, PM_1 and PAH compounds, similar to Torvela et al. [21] referenced above. Data from each of the burn periods indicated the smallest mass emission concentration (mg/MJ, (amount of particles per kilogram of dry wood combustion)) and smallest particles were produced during the efficient period (average diameter of 35–75 nm) and the largest particle diameter size and mass emission concentration were observed during the smoldering condition (average diameter ~200 nm). From the groups chemical analysis, they found Zn was the most abundant metal with the highest relative fraction occurring during the efficient conditions. The fraction of PAHs were found to be lowest during the efficient burn and highest during the smoldering. TEM analysis showed the smoldering burn produced particles were made up of mostly large agglomerates of soot (EC and OC), intermediate burns produced a variety of particles from soot agglomerates and ash or composite particles of ash (mainly K, O, Zn determined from Electron Dispersion Spectroscopy) and OC, and the efficient burn produced particles which were merely composed of ash (mainly K, O, with larger amounts of P, Zn, Si and S compared to the intermediate burn).

6.5. Fireplaces and masonry heaters

Fireplaces and masonry heaters are often used in studies due to their lack of controls and so it is easy to study the effects of different types of biomass without being skewed by device controls.

As early as 1982, emission measurements were to study the size and composition of particles were taken from two residential fireplaces and one free-standing fireplace to determine the influence they potentially had on Denver's air quality. Muhlbaler Dasch [71] made both in-field and laboratory measurements, investigating five softwoods, nine hardwoods and two synthetic logs (similar to a biobrick construction). Laboratory and residential test followed EPA method 5 protocols, closely, so flue gas was diluted. A Sierra Series-220 cascade-impactor was used to determine the size distribution of particles collected. While the log type and size seemed to have the greatest effect on particulate emissions in terms of total particulate emissions (g/kg), there were no obvious differences in terms of size fractionation for the three types of wood; the mass median diameter was found to be 170 nm [71]. From SEM imaging, Muhlbaler Dasch also found the particles to be agglomerates and spherical in shape.

A study in Italy focused on investigating the particle size distribution of NP emissions from an 11 kW commercially available fireplace burning beech wood (the fuel for European standards) [2]. The group analyzed 15 tests over three different burn periods: start-up, steady state, and burn-out. Similar to US test methods the group measured from a dilution tunnel and further diluted the flue gas to achieve less particle coincidence. To determine NP concentrations an ELPI and a Fast Mobility Particle Sizer (FMPS) were used. It was concluded NPs accounted for 67% of the total particles measured with the mode particle diameter of the average size distribution to be around 10–20 nm, in all three phases, but the highest concentrations were found in the start-up phase and lowest in the steady state period [2]. The group found particles in the range of 100–326 nm as well but suggested they were likely primary soot particles that underwent condensation in the diluted and cooled fuel gas [2]. A dip in O_2 values corresponded to a decrease in number of NPs as well. Interesting in terms of environmental fate of wood combustion NPs, the group showed that due to dilution and cooling of flue gas, stable distinct size distributions during each separate phase were achieved with only slight changes during the transition from one phase to another.

In a later study by Ozgen et al. [72], using the same 11 kW stove as mentioned above [2], nanoparticles with a GMD of 28 nm accounted for 32% of the emissions whereas larger particles with a GMD of 127 nm accounted for 68% of the emissions. Similar sampling techniques were employed using a dilution tunnel. The investigators found the ignition phase was responsible for 46% of the NP burden and cold starts, which are common practice in the field, resulted in a magnitude higher in emissions. They reported that larger soot particles emitted during the flaming combustion phases were coated by condensed semi-volatile organic species that were diluted and cooled in the flue gas; this finding suggests that minimizing incomplete combustion is enough for particle number reduction. Similar to other cited studies, the Ozgen et al. [72]

Table 3
Summary of average particle size from cited sources.

Equipment	Summary: average particle sizes are given unless otherwise specified	References
Cordwood Stoves	Start up: 180–260 nm Steady state: 30; 107; 175–180 nm Burn out: 30–60 nm; 180–200 nm Burn out or start up showing the highest concentrations of NPs and steady state having the lowest concentrations of NPs In some studies, aggregations of NPs with diameters of 313–662 nms Low MW PAHs favored small NP diameters & High MW PAHs favored coarse particles Increase in oxygen in combustion chamber caused for smaller particles Decrease in oxygen caused PAH levels to increase and bind to NPs Image: high temperature combustion produced carbon aggregations with single particles having a single nuclei and turbostratic structure; low temperature combustion produced carbon dominated spherical particles	[56,61–65,67]
Pellet Stoves	7–30 nm Steady state showed lowest concentrations of NPs	[67,68]
Cordwood Boilers	60–180 nm; but as small as 12 nm to as large as 400 nm Highest concentrations seen during start up Advanced boilers produced smaller particles and lower concentrations than traditional boilers PAHs higher in older boiler technology	[31,58]
Pellet Boilers	60–130 nm (no bark pellets) 220 nm (bark pellets) No obvious trend was observed between full and intermittent output in terms of particle size, only a very slight increase in mass concentration. Particles were likely inorganic salts	[9,18,31,56,61,69]
Chip Boilers	Steady state: 25–75 nm; lowest particle concentrations Modulating: 65 nm Smolder: 160–200 nm; highest particle concentrations Lower excess air values led to lower particle counts and larger particles, however another group found greater concentrations with increased oxygen SEM & TEM images indicated different types of particles; agglomerates of spherical compact particles, perfectly spherical representing coal fly ash or irregular shaped crystalline platelets. Efficient was typically salts and crystalline while intermediate was a variety of soot agglomerates and ash; smolder was large agglomerates of soot PAHs bound to NPs lowest during efficient burns and highest during smoldering conditions	[21,56,63,70]
Fireplaces and Masonry Heaters	10–20 nm; 50–65 nm; 170 nm 70–250 nm during smoldering 100–326 nm range assumed to be agglomerates owed to cooling Start-up had highest concentrations; steady state had lowest Decrease in oxygen corresponded to decrease in NPs Newer technology stoves seemed to produce more NPs Agglomerates with individual particles spherical in shape Normal combustion showed spherical and irregular shapes while smoldering combustion showed more irregular and sintered-like structures Some salts but a presences of heavy organic compounds as well	[2,55,71–73]

found the start-up and flaming phase were characterized by small particle diameters whereas smoldering conditions had larger particle diameters. Number concentrations were greatest during the start-up phases and especially for cold start-up phases but were lower for smoldering phases.

A group in France looked at the mass and number distributions of wood combustion particles emitted from beech cordwood (12% moisture content) during normal and reduced operation from two different fireplaces; one a conventional fireplace (13 kW) with only primary air intake from the front and the other was a more compact 'next generation' fireplace (4 kW) with primary and secondary air intake. Measurements were taken from a dilution tunnel using a gravimetric based filter measurement and ELPI. Surprisingly, the study found the opposite trend of most, in that the older technology was more favorable to less particulates but ultimately showed agreement that more NPs were produced in the newer technology. The study found the next generation fireplace produced much higher particle emission numbers for than the conventional fireplace; specifically, for the reduced conditions, the emission numbers were 50 times greater in the more modern fireplace than the older conventional unit [73]. While 80% and 60% (total number of particles) of the total PM consisted of particles with a diameter less than 100 nm, for the new and old fireplaces, respectively, it only contributed to a very small extent of the total mass of the aerosol; 5.5–5.8% and 2.6–0.3% for the new and old fireplaces, respectively during normal and reduced operations [73].

Another group in Finland looked at the PM and gaseous emissions from both normal and smoldering wood combustion periods in a conventional masonry heater made of soapstone using birch cordwood at 7% moisture content. The results from the study showed a higher particle emission number measured in a dilution tunnel by the ELPI and FMPS during the normal combustion and less than half the particle emission number during smoldering state with geometric mean diameters of 56 and 65 nm by FMPS and ELPI measurements, respectively, for normal combustion, and 118 and 160 nm values for smoldering combustion [55]. Surprisingly for cordwood combustion, the repeatability was good. Even if all operating parameters are kept constant, manual fed cordwood appliances are very variable [58]. The study found the average particle number size distribution for normal combustion to be unimodal at 65 nm and the smolder combustion to produce a bimodal distribution with peaks at 70 and 250 nm [55]. In addition, SEM and TEM analysis from the hot stack showed both spherical and irregular shaped particles making up larger agglomerates and fine ash particles remained as separate particles. Normal combustion showed spherical and irregular shapes while smoldering combustion showed more irregular and sintered-like structures. The elemental analysis showed single particles were composed mainly of carbon, but also contained K, S, Zn, and less commonly O, Ca, Fe, Mg, Cl, P and Na were found [55]. Similar to studies mentioned above, particle material volatized under the beam indicating the presence of heavy organic compounds. The group was able to suggest the shifting of particle size during the different combustion conditions seemed to be determined by the amount of condensed organic vapor in the flue gas [55].

In addition to the work done by Lamberg et al. [9] on a pellet boiler, the group also studied three conventional masonry heaters and one modern masonry heater made of soapstone. All masonry heaters burned birch logs with a low moisture content (10–13% on a dry basis). The group explored continuous combustion, steady-state periods, cyclic operation, and ignition phases. Overall, GMD sizes ranged from 63 nm to 142 nm. The largest diameters were found during incomplete combustion phases and also produced bimodal number and size distributions; the ignition phase also produced a larger GMD [9]. Similar to the pellet boiler discussed above, the most abundant PAHs were pyrene and fluoranthene in addition to phenanthrene and cyclopenta[*c*,*d*]pyrene for one of the masonry heaters. Total PAH emissions from PM_1 emissions (PAH/PM_1) were higher than that of the pellet boiler but still reasonably low with a range of 0.15–2.8%.

7. Discussion

This literature review revealed two earlier review papers and about eighty research articles and reports. An earlier review by Kumar et al. reports only limited information on NP emissions from non-vehicles exhaust sources [74]; the authors reported only two studies associated with NP emissions in RWC. The current review identified and reviewed many more studies that explicitly or implicitly provide information regarding NP emission data from RWC. However, measuring and quantifying the presence of NP in emissions, and how these emissions vary based on fuel, appliance type, and combustion period are not always well investigated making correlations hard to draw. The second major review by Bølling et al. (2009) pointed out there has been a lot of work done in steady-state operating conditions but there is limited data on particles from conventional cordwood boilers, modern wood stoves, and modern cordwood boilers [10]. The current review shows that this statement still holds true eight years later. Table 3 below summarizes the information collected from the papers above. In addition, cold starts, modulation periods, and in-efficient burns exist and there may be an underestimation of real-life emissions which contain particle fractions that can be associated with health impacts in local areas [56]. As reported by Tom et al. [75], the majority of published studies were associated with laboratory experiments and field performance measurements were lacking.

There is a significant need to characterize the particle types in biomass smoke, since the regional and global climate effects of aerosols from biomass burning depend so strongly on particle properties [17]. However, manually fed cordwood stoves and boilers have a tendency to vary in their burn conditions even if fueled exactly the same way. Schmatloch and Brenn directly observed this when fueling a cordwood furnace and trying to reproduce the size distribution in particles; burn one had much fewer concentrations of NPs less than 140 nm and greater amounts of NPs larger than 220 nm than burn two which showed opposite trends [58]. This is owed to the nature of wood- how it burns and falls within the combustion chamber. This makes reproducibility very difficult and particle size distributions to have a larger variation than advanced automatic feed boilers [58]. This statement compliments the findings by Gaegauf et al. [56]. This also makes it difficult to compare particle size distribution among studies. To complicate matters, Baer indicates that nanoparticles are inadequately characterized since they change with time and can be altered or damaged during analysis [76], so precautions must be taken to not bias research. Some key factors which may cause some uncertainty are sampling locations, sampling temperatures, and dilution ratios [74]. Ozgen et al. point out that the variability of the results concerning the number emissions and the size distribution during different stages of the wood burning cycle suggests that emissions are strongly connected to the combustion conditions depending on the appliance design and operation [72].

The study by Johansson et al. [31] emissions from pellet boilers were closer to those of an oil burner while old-type wood boilers had the highest. An important piece from the study was that emissions from the old-type wood boiler could be reduced if it was connected to a storage tank, similar to advanced modern units, higher quality fuel (lower moisture content) was used, or if fuel amount was decreased and small batches of fuel were loaded instead of a full charge. The study found poorer combustion conditions increased the amount of particles smaller than 100 nm. Finally, the group compared the wood combustion devices to oil burners finding pellet systems rivaled oil burners but old-type wood boilers would have low efficiencies, high PM emissions, and unoxidized gaseous compounds [31].

While advanced systems that employ multiple control devices may decrease the amount of PM emission concentrations as well as reduce the amount of harmful PAHs produced, they tend to be expensive. In 2006, the International Energy Agency commented on using ESPs to reduce submicron particles but such devices were very expensive and not affordable for residential use [27]. Another review suggested the easiest way to control emissions is to use a high quality fuel with low ash content, low moisture, and constant piece size whose options may also not cost competitive, or boilers must use proper combustion chamber designs and adequate air pollution control technology [54]. Therefore, there is a need to develop cost sensitive, yet effective, submicron PM reduction technologies. One interesting technology discussed in a review by Lim et al. [77], is the use of a miniature pipe bundle heat exchanger (a technology used in the automobile industry) where particles migrate to the lower temperature surfaces and deposit on the tube walls to remove particles from the flue gas. Other options may also include better combustion designs or controls, such as lambda probes. Lambda probes can detect the oxygen levels and effectively modulate the air to fuel ratio. Several studies above indicated as optimal oxygen levels were reached, less particles were formed and a shift towards larger particle sizes was achieved [2,56,63,78]. Perhaps lambda sensors could be used to favor a combustion condition which reduces the amount of harmful NPs produced.

Incomplete combustion, smoldering, and transition conditions are known to favor PAH and black carbon production. Further, when temperatures are low, PAHs can condense or adsorb onto particles [77]. Smaller NPs are known to carry larger PAH molecules and are difficult to remove, while larger more coarse particles carry lower molecular weight PAHs [77]. Likewise, Ghiassi et al. found the most reactive soot had an amorphous nanostructure which was composed of short individual layer planes with no orientation relative to each other [79]. The laboratory study by Hata el al. indicated biomass type and the heating rate had a significant effect on the water soluble OC fraction and the smaller the NP, the more water soluble OC the particle contained [22]. Very few studies have looked at the microstructure of NPs but this could also provide important information on the NPs reactivity. The microstructure of NPs can give information about particle formation, condensation, coagulation [65,80,81] and the ability to accumulate reactive substances [65,82].

Ideally, a NP with a low mobility is desired to reduce inhalation or atmospheric risks. Ultimately, it is important to understand the rate of environmentally induced changes and how the migration of particles changes their properties [76]. Understanding the aggregation behavior under both atmospheric and aquatic conditions may help further predict their potential interactions with the ambient environment [26]. Mavrocordatos et al. [18] investigated the affect salt content within the particles play and found their morphology was significantly affected in aqueous environments. Perhaps if a sufficient amount of information was gathered on NPs soot emissions from RWC which included explicit details on fuel type, operating parameters, and sampling conditions, manufacturers and operators could be informed with a ‘best practices’ procedure.

As shown in many of the studies reviewed herein, NPs account for a substantial amount of the particle emissions associated with biomass combustion. However, standards enforced by regulatory agencies are mass concentration based, focusing on size ranges less than or equal to 10 μm (total PM; PM_T) or less than or equal to 2.5 μm ($PM_{2.5}$). Due to

NPs small size, current measures may not be appropriate for particles in the nano and ultrafine size fraction since they contribute very little to the overall mass. However, they contribute significantly to the overall number of the airborne particles present [11,83] and, potential adverse health effects posed by NPs may go unknown [19]. Lim et al. [77], reported that dilution sampling affects particle emissions by promoting nucleation but results in an increase in the formation of ultrafine particles which are better represented by particle number measurements. Torvela et al. investigated the intermittent period when switching from one condition to another, finding the properties of the PM emissions varied significantly even within a short period suggesting that an evaluation of environmental and adverse health effects based on average particle property values can be misleading [21]. Further, Lamberg et al. concluded from their study that PM_1 mass does not reflect all of the variation affecting possible toxic properties of fine particles originating from combustion [9].

From the Gaegauf et al. [56] study in particular, the highest concentration of total suspended particles (TSP) (mg/m^3) correlated nicely to the highest total number of nanoparticles (< 600 nm) collected per MJ of output. Masonry stoves had the highest TSP concentration along with the highest emission factor of NPs per MJ. In comparison, automatic feed pellet boilers had the lowest TSP and the lowest total number emission factor of NPs. However, when looking at the emission factor (mg/MJ) for both TSP and NPs data in detail, the group noticed while each appliance type typically showed good correlation between the two values, individual cases such as the cordwood boiler showed roughly a 40% reduction in the NP emission factor from the TSP emission factor. This supports the suggestion to modify existing test method regulations or add to them a measurement involving particle count, size, or surface area.

One positive note from a study which compared vehicle emissions to RWC emissions suggests wood smoke may be associated with less negative health effects as diesel NPs were smaller in diameter and have 41% more surface area [64]. Unfortunately another study found PAH content was higher for combustion particles from wood smoke compared to vehicle exhaust, causing risk for a high mutagenic and carcinogenic potential [65].

8. Conclusions and recommendations

Current emission regulations from wood combustion devices in the US and EU are based on an overall mass concentration of particles and NPs are neither measured nor reflected in these emission regulations, allegedly because of their low mass contribution. This review revealed that NPs account for a substantial amount of particle emissions associated with residential wood combustion (RWC) devices. A long standing argument has been the need to modify existing test method regulations or add to them a measurement involving particle count, type size, or surface area. NPs from RWC cause local environmental impacts and potential global impacts due to large concentrations in the atmosphere.

This review identified combustion conditions that may result in increasing amounts of NP emissions. These are associated with the device type, its operation, and the fuel used. We often see an inverse relationship between the total PAH mass and its NP fraction. It is reported that PAH emissions could be up to 100 times higher if a stove was not operated properly, although NP production would be decreased. Also it is reported that, if an advanced system's heating load is decreased, cordwood and automatic wood-fired boilers (pellet and chips) may have trouble modulating, causing them to cycle frequently and generate more mass PAH emissions, but lower NPs. It is a cause for concern that NPs may be undetected as by virtue of their large surface to volume ratio they adsorb larger amounts of reactive compounds and, therefore, may induce a more pronounced pro-inflammatory response than larger particles of the same compound. A significant, and unexpected finding is that as conventional units are displaced by modern, more efficient and “cleaner” systems, an increase in released NPs may follow. However, with more efficient boiler systems PAH levels are being decreased; causing one to argue what is more important NPs or PAHs?

Particle distribution of batch-wise fired appliances (wood stoves) varied significantly during a burn cycle, while wood log and continuous fed boilers showed a fairly constant particle size distribution. These differences are likely to influence the biological effects induced by wood smoke particles and therefore it has been recommended to explore how combustion conditions influence the particle properties, their possible health risks, and reactivity within the environment. Although a lot of work has been done to understand the health effects associated with RWC NPs, but little is known about the environmental fate of RWC NPs and their effect on climate.

In addition, NP emission data from wood burning processes under real-world operating conditions are lacking. More data are needed about source, expected quantities or concentrations, and environmental pathways to help identify situations which may be more favorable than others. Several studies show results of size characterization but morphology and chemical composition data are limited. Predicting or studying the aggregation, agglomeration, dispersion, size, solubility, surface area, charge, and composition are all necessary parameters to better predict the environmental fate and any health concerns of biomass combustion NPs. While biomass is often considered and encouraged as a renewable energy source, it is important to not ignore consequences of poor combustion practices and NP production.

Several articles have suggested pathways to reduce NPs such as emission control strategies or higher quality fuel sources. Emission control devices suggested for large biomass boilers include ESPs and condensing heat exchangers but their effectiveness in controlling NP has not been assessed.

Acknowledgement

Rebecca Trojanowski is grateful to New York State Energy Research and Development Authority (NYSERDA) for partial support of this research through contracts # 29697 and # 63038, Dr. Barbara Panessa-Warren (Guest Scientist at Brookhaven National Laboratory), Dr. Thomas Butcher (Group Leader of the Energy Conversion Group at Brookhaven National Laboratory), and Dr. John B. Warren (Scientist in the Instrumentation Division at Brookhaven National Laboratory).

References

[1] Buzea C, Pacheco II, Robbie K. Nanomaterials and nanoparticles: sources and toxicity. Biointerphases 2007;2(4):MR17–71.
[2] Hugony F, Ozgen S, Morreale C, Signorini S, Cernuschi S, Maggioni A, et al. Nanoparticles size distribution in wood combustion. In: Proceedings of the 16th ETH-conference on combustion generated nanoparticles, Zurich, Switzerland; 2012.
[3] Saarnio K. Chemical characterisation of fine particles from biomass burning. Kelsinki: Finnish Meteorological Institute; 2013.
[4] Boman BC, Forsberg AB, Jarvholm BG. Adverse health effects from ambient air pollution in relation to residentail wood combustion in modern society. Scand J Work Environ Health 2003;29(4):251–60.
[5] Clean Heat- Environmental Action Germany. Residential wood burning: environmental impact and sustainable solutions. Berlin: DeutscheUmwelthilfe; 2016.
[6] Chen L-WA, Moomuller H, Arnott WP, Chow JC, Watson JG, Susott RA, et al. Emissions from laboratory combustion of wildland fuels: emission factors and source profiles. Environ Sci Technol 2007;41:4317–25.
[7] (NESCAUM). Northeast States for coordinated air use management. New York State wood heat report: an energy, environmental, and market assessment. Rep. no. 15–26. New York State Energy Research and Development Authority, Albany.
[8] Kumar P, Robins A, Vardoulakis S, Britter R. A review of the characteristics of nanoparticulates in the urban atmosphere and the prospects for developing regulatory controls. Atmos Environ 2010;44:5035–52.
[9] Lamberg H, Nuutinen K, Tissari J, Ruusunen J, Yli-Pirila P, Sippula O, et al. Physiochemical characterization of fine particles from small-scale wood combustion. Atmos Environ 2011;45:7635–43.
[10] Bølling AK, Pagels J, Yttri KE, Barregard L, Sallsten G, Schwarze PE, et al. Health effects of residential wood smoke particles: the importance of combustion conditions and physicochemical particle properties. Part Fibre Toxicol 2009;6(29).
[11] Hosgood HD, Lan Q, Vermeulen R, Wei H, Reiss B, Coble J, et al. Combustion-

derived nanoparticle exposure and household solid fuel use in Xuanwei and Fuyuan, China. Int J Environ Health Res 2012;22(6):571–81.
[12] Nienow AM, Roberts JT, Zachariah MR. Surface chemistry of nanometer-sized aerosol particles: reactions of molecular oxygen with 30 nm soot particles as a function of oxygen partial pressure. J Phys Chem B 2005.
[13] Dellinger B, D'Alessio A, D'Anna A, Ciajolo A, Gullett B, Henry H, et al. Combustion byproducts and their health effects: summary of the 10th International congress. Environ Eng Sci 2008;25(8).
[14] Bystrzejewska-Piotrowska G, Golimowski J, Urban PL. Nanoparticles: their potential toxicity, waste and environmental management. Waste Manag 2009;29:2587–95.
[15] Somasundaran P, Fang X, Ponnurangam S, Li B. Nanoparticles: characteristics, mechanisms, and modulation of biotoxicity. KONA Power Part J 2010;28:38–49.
[16] Nowack B, Bucheli TD. occurrence, behavior and effects of nanoparticles in the environment. Environ Pollut 2007;150:5–22.
[17] Posfai M, Gelencser A, Simonics R, Arato K, Li J, Hobbs PV, et al. Atmospheric tar balls: particle from biomass and biofuel burning. J Geophys Res 2004;109.
[18] Mavrocordatos D, Kaegi R, Schmatloch V. Fractal analysis of wood combustion aggregates by contact mode atomic force microscopy. Atmos Environ 2002;no. 36:5653–60.
[19] Biswas P, Wu C-Y. Nanoparticles and the environment. J Air Waste Manag Assoc 2005;55(6):708–46.
[20] Popovicheva OB, Kozlov VS, Engling G, Diapouli E, Persiantseva NM, Timofeev MA, et al. Small-scale study of Siberian biomass burning: I. Smoke microstructure. Aerosol Air Qual Res 2015;15:117–28.
[21] Torvela T, Tissari J, Sippula O, Kaivosoja T, Leskinen J, Viren A, et al. Effect of wood combustion conditions on the morphology of freshly emitted fine particles. Atmos Environ 2014;87:65–76.
[22] Hata M, Chomanee J, Thongyen T, Bao L, Tekasakul S, Tekasakul P, et al. Characteristics of nanoparticles emitted from burning of biomass fuels. J Environ Sci 2014;28:1913–20.
[23] D'Anna A. Combustion-formed nanoparticles. Proc Combust Inst 2009;32:593–613.
[24] Caserini S, Galante S, Ozgen S, Cucco S, Gregorio KD, Moretti M. A methodology for elemental and organic carbon emission inventory and results for Lombardy region, Italy. Sci Total Environ 2013;450–451:22–30.
[25] Smita S, Gupta SK, Bartonova A, Dusinska M, Gutleb AC, Rahman Q. Nanoparticles in the environment: assessment using the casual diagram approach. Environ Health 2012;11:1–11.
[26] Chen C, Huang W. Aggregation kinetics of diesel soot nanoparticles in wet environments. Environ Sci Technol 2017;51:2077–86.
[27] International Energy Agency. IEA bioenergy updated 21. Biomass Bioenergy 2006;30(3):I–.
[28] Jonnalagadda S, Nenzou B. Studies on arsenic rich mini dumps: I. Effect of the surface soil. J Environ Sci Health 1996;31(8):1909–15.
[29] Siegenthaler J. Hydronics for high efficiency biomass boilers. NYSERDA; 2017.
[30] Twin Waters Energy. Central Boiler (R) Classic Outdoor Wood Furnaces. Twin Waters Energy; 2017. Available online: ⟨http://www.twinwatersenergy.com/howitworks.htm⟩.
[31] Johansson LS, Leckner B, Gustavsson L, Cooper D, Tullin C, Potter A. Emission characteristics of modern and old-type residential boilers fired with wood logs and wood pellets. Atmos Environ 2004;38:4183–95.
[32] HyProTherm. HyProTherm Outdoor Wood Furnace. HyProTherm Furnace, 6 10 2016. Available online: ⟨http://www.outdoorwoodfurnaceboiler.com/Best-Outdoor-Wood-Furnace-PRINT.html⟩.
[33] Wood Heating Solution. Forced Air Furnaces. Wood Heating Solutions LLC; 2017. Available online: ⟨https://www.wood-heating-solutions.com/outdoor-forced-air-furnaces/⟩.
[34] United State Environmental Protection Agency, Burn wise: choosing wood burning appliances; May 2017. Available online: ⟨https://www.epa.gov/burnwise/choosing-wood-burning-appliances⟩. [Accessed May 2017].
[35] Jensen W, Fremer K, Sierila P, Wartiowaara V. The chemistry of bark. In: The chemistry of wood. Interscience Publishers, NY; 1963. p. 587–666.
[36] Romero C. Tree responses to stem damage. Gainesville: Dept. of Botany, University of Florida; 2006.
[37] Yang Y, Yamauchi H, Nasserzadeh N, Swithenbank J. Effects of fuel devolatilisation on the combustion of wood chips and incineration of simulated municipal solid wastes in a packed bed. Fuel 2003;82(18):2205–21.
[38] Demirbas A. Combustion characteristics of different biomass fuels. Prog Energy Combust Sci 2004;30(2):219–30.
[39] McKendry P. Energy production from biomass (part 1): overview of biomass. Bioresour Technol 2002;83(1):37–46.
[40] Sawidis T, Breuste J, Mitrovic M, Pavlovic P, Tsigaridas K. Trees as bioindicator of heavy metal pollution in three European cities. Environ Pollut 2011:3560–70.
[41] Alakangas E. European standards for fuel specification and classes of solid biofuels. In: Solid biofuels for energy, Springer; 2011, p. 21–41.
[42] High Quality Wood Pellets Come in All Sizes and Colors. woodpellets.com. ; 2017. Available online: ⟨http://www.woodpellets.com/heating-fuels/pellet-differences.aspx⟩.
[43] Nilsson D, Bernesson S, Hansson P-A. Pellet production from agricultural raw materials- a systems study. Biomass Bioenergy 2011;35(1):679–89.
[44] European Pellet Council. Handbook for the certification of wood pellets for heating purposes: ENplus. European Pellet Council; 2013.
[45] United States Department of Energy. Wood and pellet heating. Available online: ⟨https://energy.gov/energysaver/wood-and-pellet-heating⟩. [Accessed 2017].
[46] Rinne S, Holmberg H, Myllymaa T, Kontu K, Syri S. "Wood chip drying in connection with combined heat and power or solar energy in Finland. In: Proceedings of the EPJ Web of Conferences, vol. 79, no. T3 – Energy Production, Distribution and Storage; 2014. p. 1–9.
[47] Loria K. Watching wood dry. BIOMASS Magazine, 26 July 2016. Available online: ⟨http://biomassmagazine.com/articles/12181/watching-wood-dry⟩. [Accessed 2017].
[48] Ioannidi M. Woodchip fuel supply chain: from forest to Hopper. Glasgow: Department of Mechanical Engineering at The University of Strathclyde in Glasgow; 2002.
[49] Grover P, Mishra S. Biomass briquetting: technology and practices. Bangkok: Food and Agriculture Organization of the United Nations; 1996.
[50] Shuma R, Madyira DM. Production of loose biomass briquettes from agricultural and forestry residues. Procedia Manuf 2017;7:98–105.
[51] Chin Chin O, Siddiqui KM. Characteristics of some biomass briquettes prepared under modest die pressures. Biomass Bioenergy 2000;18(3):223–8.
[52] Chou C-S, Lin S-H, Lu W-C. Preparation and characterization of solid biomass fuel made from rice straw and rice bran. Fuel Process Technol 2009;90(7–8):980–7.
[53] Ozgen S, Caserini S, Galante S, Giugliano M, Angelino E, Marongiu A, et al. Emission factors from small scale appliances burning wood and pellets. Atmos Environ 2014;94:144–53.
[54] Villeneuve J, Palacios JH, Savoie P, Godbout S. A critical review of emissions standards and regulations regarding biomass combustion in small scale units. Bioresour Technol 2012;111:1–11.
[55] Tissari J, Lyyranen J, Hytonen K, Sippula O, Tapper U, Frey A, et al. Fine particle and gaseous emissions from normal and smouldering wood combustion in a conventional masonry heater. Atmos Environ 2008;42:7862–73.
[56] Gaegauf C, Wieser U, Macquat Y. "Field investigation of nanoparticle emissions from various biomass combustion systems. In: International seminar: aerosols from biomass combustion, Zurich, Switzerland; 2001.
[57] Nussbaumer T. "Characterisation of particles from wood combustion with respect to health relevance and electrostratic precipitation. In: Central European Biomass Conference, Gratz, Austria; 2011.
[58] Schmatloch V, Brenn J. Fine particle emissions from combustion in small wood fired furnaces. In: International Seminary: Aerosols from Biomass Combustion, Zurich, Switzerland; 2001.
[59] McDonald JD, Zielinska B, Fujita EM, Sagebiel JC, Chow JC, Watson JG. Fine particle and gaseous emission rates from residential wood combustion. Environ Sci Technol 2000;34:2080–91.
[60] Orasche J, Seidel T, Hartmann H, Schnelle-Kreis J, Chow JC, Ruppert H, et al. Comparison of emissions from wood combustion. Part 1: emission factors and characteristics from different small-scale residential heating appliances considering particulate matter and polycyclic aromatic hydrocarbon (PAH)-related toxicological potential. Energy Fuels 2012;26:6695–702.
[61] Bologa A, Paur H-R, Seifert H, Woletz K. Fine particle generation, evolution and control by small biomass combustion. Manag Environ Qual: Int J 2012;23(1):36–55.
[62] Hays MD, Smith ND, Kinsey J, Dong Y, Kariher P. Polycyclic aromatic hydrocarbon size distribution in aerosols from appliances of residential wood combustion as determined by direct thermal desportion- GC/MS. J Aerosol Sci 2003;34:1061–84.
[63] Hueglin C, Gaegauf C, Kunzel S, Burtscher H. Characterization of Wood Combustion Particles: morphology, Mobility and Photoelectric Activity. Environ Sci Technol 1997;31:3439–47.
[64] Kocbach A, Johansen B, Schwarze P, Namork E. Analytical electron microscopy of combustion particles: a comparison of vehicle exhaust and residential wood smoke. Sci Total Environ 2005;346:231–43.
[65] Kochbach A, Li Y, Yttri KE, Cassee FR, Schwarze PE, Namork E. Physicochemical characterisation of combustion particles from vehicle exhaust and residential wood smoke. Part Fibre Toxicol 2006;3(1):1–10.
[66] Heckman F. Microstructure of carbon black. Rubber Chem Technol 1964;37(5):1245–98.
[67] Corsini E, Ozgen S, Papale A, Galbiati V, Lonati G, Fermo P, et al. Insights on wood combustion generated proinflammatory ultrafine particles (UPF). Toxicol Lett 2017;266:74–84.
[68] Commodo M, Sgro LA, D'Anna A, Minutolo P. Size distribution of nanoparticles generated by a heating stove burning wood pellets. EQA-Environ Qual 2012;8:21–6.
[69] Kaivosoja T, Jalava P, Lamberg H, Viren A, Tapanainen M, Torvela T, et al. Comparison of emissions and toxicological properties of fine particles from wood and oil boilers in small (20–25 kW) and medium (5–10 MW) scale. Atmos Environ 2013;77:193–201.
[70] Leskinen J, Tissari J, Uski O, Viren A, Torvela T, Kaivosoja T, et al. Fine particle emissions in three different combustion conditions of a wood chip-fired appliance-particulate physico-chemical properties and induced cell death. Atmos Environ 2014;86:129–39.
[71] Dasch J Muhlbaler. Particulate and gaseous emissions from wood-burning fireplaces. Environ Sci Technol 1982;16(10):639–45.
[72] Ozgen S, Cernuschi S, Giugliano M. Experimental evaluation of particle number emissions from wood combustion in a closed fireplace. Biomass Bioenergy 2013;50:65–75.
[73] Ozil F, Haas F, Trouve G. Size distributions and emission factors of PM1 and PM2.5 during wood combustion in domestic fireplaces. ResearchGate; 2014.
[74] Kumar P, Pirjola L, Ketzel M, Harrison RM. Nanoparticle emissions from 11 non-vehicle exhaust sources- a review. Atmos Environ 2013;67:252–77.
[75] Tom T, Griet W, Jan C, Silvia L. Literature review of emissions of modern wood combustion devices and emissions reducing technologies, under real-life conditions. University of Antwerp, Institute of Environmental & Sustainable Development; 2017.
[76] Baer DR. Surface Characterization of Nanoparticles: critical needs and significant challenges. J Surf Anal 2011;17(3):163–9.

[77] Lim MT, Phan A, Roddy D, Harvey A. Technologies for measurement and mitigation of particulate emissions from domestic combustion of biomass: a review. Renew Sustain Energy Rev 2015;49:574–84.
[78] Johansson L, Tullin C, Leckner B. Particulate emissions from small-scale biomass combustion. In: International Seminar: Aerosols from Biomass Combustion, Zurich, Switzerland; 2001.
[79] Ghiassi H, Toth P, Jaramillo IC, Lighty JS. Soot oxidation-induced fragmentation: Part 1: the relationship between soot nanostructure and oxidation-induced fragmentation. Combust Flame 2016;163:179–86.
[80] Ishiguro T, Takatori Y, Akihama K. Microstructure of diesel soot particles probed by electrong microscopy: first observation of inner core and outer shell. Combust Flame 1997;108:231–4.
[81] Lighty J, Veranth J, Sarofim A. Combustion aerosols: factors governing their size and compostion and implications to human health. J Waste Manag Assoc 2000;50:1565–681.
[82] Berube K, Jones T, Williamson B, Winters C, Morgan A, Richards R. Physicochemical characterisation of diesel exhaust particles: factors for assessing biological activity. Atmos Environ 1999;33:1599–614.
[83] Andersen ZJ, Wahlin P, Raaschou-Nielsen O, Scheike T, Loft S. Ambient particle source apportionment and daily hospital admissions among children and elderly in Copenhagen. J Expo Sci Environ Epidemiol 2007;17:625–36.
[84] Hartmann H, Turowski P, Kiener S. Electrostatic precipitators for small-scale wood combustion systems- Results from lab- and field tests. Graz: Central European Biomass Conference; 2011.