(1 : 80)

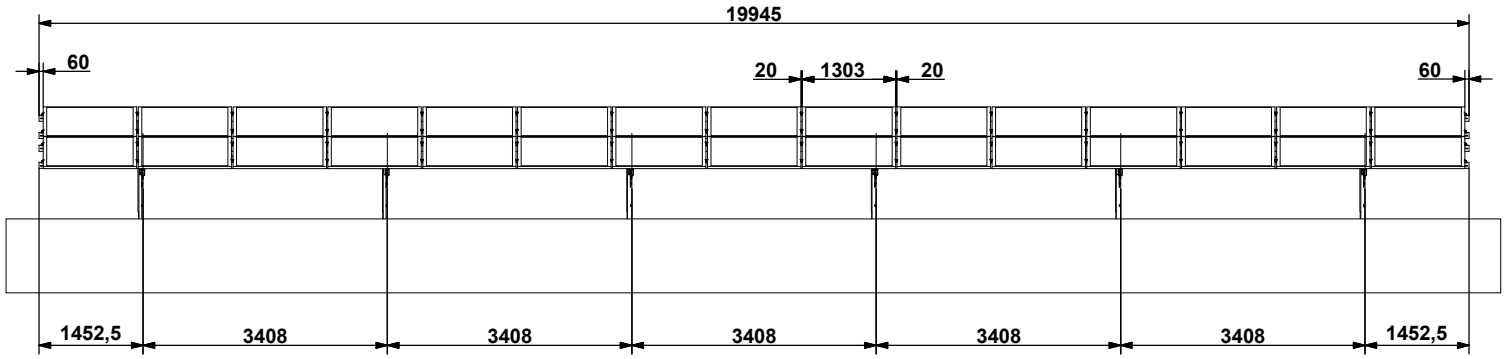

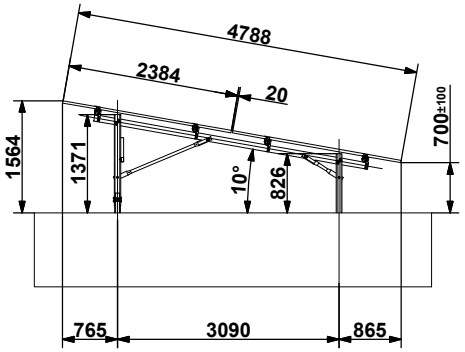

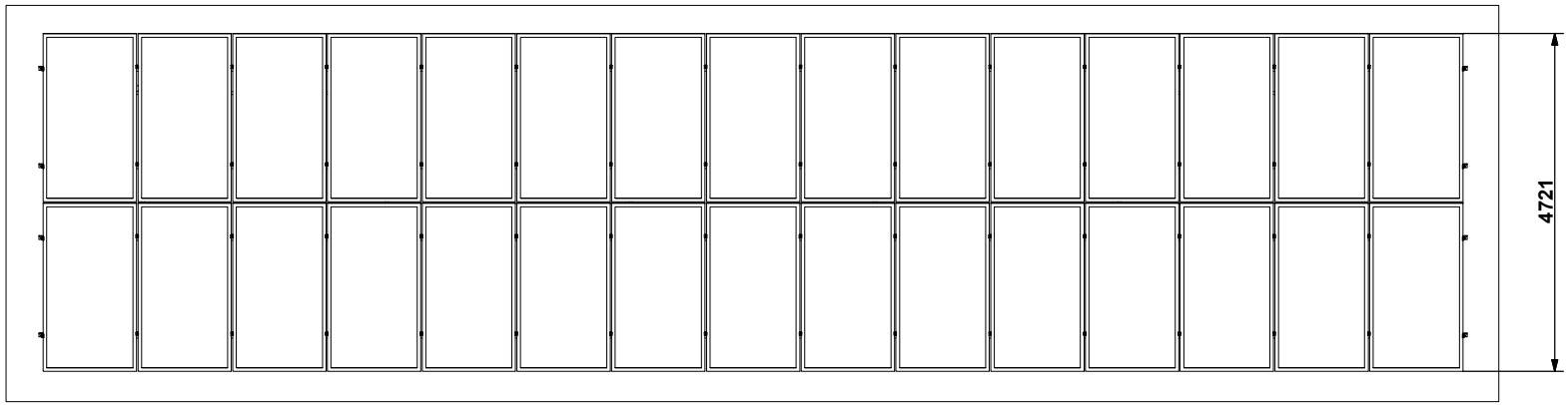

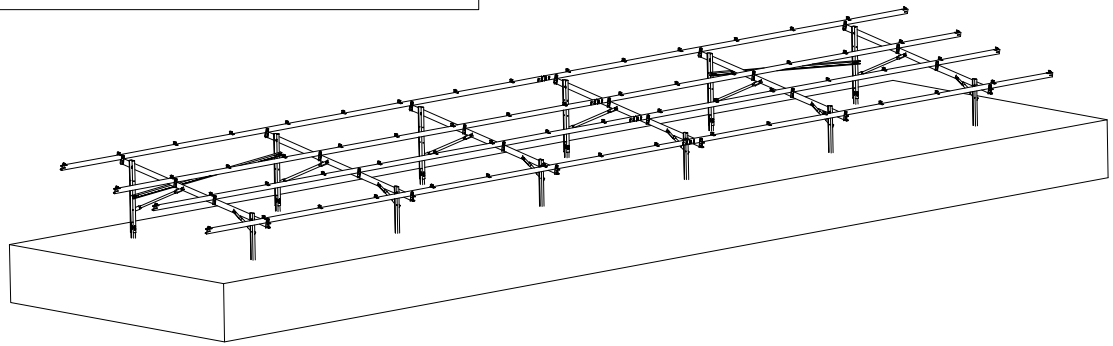

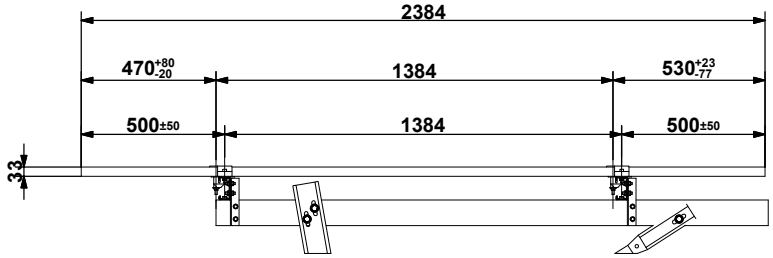

PV CLAMPS POSITION (1 : 20)

*PRELIMINARY

Rev.:	By:	Date:	Change:
0			
1			

CUSTOMER: **STATKRAFT**	Drawn by: Martín	Date:	AXIAL structural solutions
Project:	Quality:		NOTE: DIMENSIONAL TOLERANCE ACCORDING TO UNE_EN 1090 STANDARD AND ISO 2768-m STANDARD
System: **BP_2x15_V10º**	Treatement:		F105-Rev3
00 Structure Assembly 2V15 - Preliminary.idw	Material:	Code:	View System:
	Weight: N/D		